2026 VACANZA-ion 24

TOUR FLOOR PLAN

AWD

Mercedez-Benz Sprinter

OWNER'S MANUAL

WWW.GRECHRV.COM

WELCOME TO THE GRECH RV FAMILY,

Thank you for choosing a Grech RV. This Owner's Manual is designed to help you become familiar with your 2026 Vacanza-ion, including its systems, features, and everyday operation.

The *Vacanza-ion* is built on the Mercedes-Benz Sprinter 3500XD 170" Extended High Roof chassis and is available in AWD (All-Wheel Drive) configuration. All models are equipped with the 4-cylinder High Output diesel engine, providing dependable performance, efficient operation, and confident driving in a wide range of conditions.

The *Vacanza-ion* is designed as a streamlined, value-focused platform within the Grech RV lineup. It features a simplified, service-friendly equipment layout with reduced system complexity compared to higher-content models, while maintaining the build quality, craftsmanship, and functional comfort expected from a Grech RV.

Whether you are new to RV ownership or experienced with similar platforms, this manual will guide you through the Vacanza-ion's components, controls, and recommended operating practices to help ensure safe, confident, and reliable use of your vehicle.

FLOORPLAN

TOUR FLOORPLAN

Length: 24'
Seats up to: 7
Sleeps up to: 2

WARNING

Your Mercedes-Benz Sprinter Van Operator's Manual and Warranty Guide include essential safety warnings, operational guidelines, and warranty details related to your Sprinter chassis and its components. It is important that all information provided in those manuals is read and followed carefully to ensure your safety and proper vehicle operation.

The Grech RV Owner's Manual offers additional guidance specific to your luxury RV, including helpful tips and recommendations for touring use. However, nothing in the Grech RV manual should be interpreted as replacing, overriding, or contradicting the safety warnings or operational instructions provided in the official Mercedes-Benz documentation.

NOTICE

Vehicle Configuration: *The configuration, layout, or floorplan of your RV may differ from the illustrations or descriptions shown in this manual. Features, materials, and equipment can vary depending on the specific model, production date, or optional packages installed at the factory. Always refer to your actual vehicle for exact details.*

NOTICE

Product Specifications and Updates: *The information, images, and specifications in this manual reflect the most accurate product details available at the time of publication. Grech RV continually evaluates materials, components, and manufacturing processes to ensure product quality and reliability. The company reserves the right to implement design, material, or production changes at any time without prior notice whenever such updates are deemed necessary or beneficial.*

Mercedes-Benz Sprinter 3500 170” EXT RV Class B STRADA RV	
MERCEDEZ-BENZ CHASSIS FEATURES	
Engine	4 Cylinder Diesel High Output
Chassis	2026 Mercedes-Benz Sprinter 3500XD 170” No EXT
Horsepower/ Torque	211 HP / 332 lb-ft
Transmission	9-speed 9G-TRONIC
Drive Type	All-Wheel Drive (AWD)
Multimedia System	MBUX Multimedia System with 10.25” touchscreen
In-Vehicle WiFi	Mercedes me connect – WiFi (requires subscription)
Radio	Sirius XM Satelite Radio
Steering Wheel	Multifunction Leather Steering Wheel
Adaptive Cruise Control	Active Distance Assist DISTRONIC
Seats	- Power Driver and Co-drivers Seat - Swivel Driver and Co-drivers Seat - Heated Driver and Co-drivers Seat
Mercedes-Benz Sprinter	**Basic Limited Warranty:** - 3 years or 36,000 mi **Engine Limited Warranty:** - 5 years or 100,000 mi **24/7 - 365 Mercedes-Benz Roadside Assistance:** - 3 years or 36,000 mi
Grech RV Warranty	- 3 Years up to 36,000 Miles Limited Warranty. - Grech RV warranties the specific motorhome to be free from manufacturing defects in materials and craftsmanship on portions manufactured by Grech RV under normal wear and tear. Individual components may carry their own respective warranty.
Active Brake Assist	
Blind Spot Assist Mirror	
Wet Wiper System	
Attention Assist	
LED High-Performance Headlamps	
Parking Sensors	
Trailer Tow Package	
Electric Sliding Door	

Mercedes-Benz Sprinter 3500 RV VACANZA-ion 24 AWD 170 EXT	
CHASSIS AND PERFORMANCE	
TIRES	Dual LT215/85R16
TRANSMISSION	9G-TRONIC – 9-Speed transmission
WHEEL BASE	170'' | 14' 2''
FUEL TANK & TYPE	- 24.5 gallons (approximately 93 liters) - Ultra-Low Sulfur Diesel (ULSD) - Passenger side (right-hand side of vehicle)
GROSS VEHICLE WEIGHT RATING	11,030 lbs | 5003 Kg
GAWR FRONT	4,410 lbs | 2,000 Kg
GAWR REAR	7,720 lbs | 3,502 Kg
RIMS FRONT	16 x 5.5 Rims @ 61 PSI 420 Kpa/COLD
RIMS REAR	16 x 5.5 Rims @ 58 PSI 400 Kpa/COLD
HITCH WEIGHT (TONGUE WEIGHT)	500 lbs
MAX. TRAILER WEIGHT (TOWING CAPACITY)	5000 lbs
DIMENSIONS	
EXTERIOR OVERALL LENGTH	290'' | 24' 2''
EXTERIOR OVERALL HEIGHT	AWD: 122'' | 10'2''
EXTERIOR OVERALL WIDTH	80'' | 6' 8''
EXTERIOR OVERALL WIDTH WITH MIRRORS	95.5'' | 7' 11.5''
INTERIOR HEIGHT	74'' | 6' 2''
WATER & PLUMBING SYSTEM	
FRESH WATER CAPACITY	26 gallons (98.4 L) 12V heated
GRAY WATER TANK	27 gallons (102.2 L) 12V heated
BLACK WATER TANK	13 gallons (49.2 L) 12V heated
UTILITY CENTER	- Fresh Water Holding Tank Fill - City Water Connection - Exterior Shower Port - Black and Gray Manual Tank Valve - Sewer Hose Outlet Connection - 30-Amp Shore Power Inlet (110V/120V AC)
ELECTRICAL SYSTEM	
BATTERIES	(1) 51V 165Ah Lithium-Ion Batteries with NeverDie® BMS. Total Capacity: 8,448 Wh (8.4 kWh)
INVERTER	Victron MultiPlus-ll - 3,000W Smart Inverter / Charger
ALTERNATOR AND REGULATOR	ARCO Zeus High-Performance Alternator & Regultator
BATTERY CHARGER	Inline Chassis Battery Charger
SOLAR POWER	Roof- Mounted Renogy Solar Panel System
CONTROL SYSTEM	Garmin Integrations Control System w/ Touch Screen Panel Garmin Mobile Application Controller Garmin® SERV+™ House Control System
REMOTE ACCESS	Garmin Mobile Appliccation
SATELLITE SETUP	Starlink Wiring & Mounting Preparation (Antenna Not Included)
POWER OUTLETS	110V/120V Interior and Exterior Power Outlets
CHARGING OUTLETS	USB Type-C and 110V Charging Ports

Mercedes-Benz Sprinter 3500 RV VACANZA-ion 24 AWD 170 EXT	
HVAC	
AIR CONDITIONING	15,000 BTU Gree Eco-Cool A/C with Heat Pump
WATER HEATER AND FURNACE TYPE	Diesel-Powered Timberline System – Tankless Hot Water Heater and Hydronic Furnace
GALLEY	
REFRIGERATOR/FREEZER	Novakool RFU7100DC 12V Refrigerator and Freezer
MICROWAVE	Contoure AZ-2505-CON Combo Microwave/Convection/Air Fryer
COOKTOP	Duxtop Single Burner Portable Induction (Model 9600LS / BT-200DZ, 1800W)
COUNTERTOP	Solid Surface with Farmhouse- Style Sink
ENTERTAINMENT	
TELEVISION	(1) VIZIO VHD24M-0810 – 24” HD LED Smart TV
SOUNDBAR	VIZIO V-Series 2.0 Compact – Model V20x-J8
INTERIOR FEATURES	
SEATS	- Ultraleather Rear Seating Surfaces - Memory Foam Power Sofa Bed - Power Driver and Co-Driver Seats - Heated Driver and Co-Driver Seats - Swivel Driver and Co-Driver Seats - Seats up to 7 | Sleeps up to 2
SOFA/BED	66'' W x 76'' L (Excluding Headrests)
CABINET DOORS	Hardwood Cabinetry with Radius Doors
FLOORING	Altro Wood-Look Laminate (Commercial- Grade Vinyl)
INSULATION	Full Fiberglass Insulation
WINDOW SHADES	Automotion Manual Window Shades
LIGHTING	- LED Ambient Interior Lighting - LED High-Performance Headlamps - Power Awning with Integrated LED Lighting
EXTERIOR	
AWNING	Girard Systems Model GRT750 - 14' x 8' - 12V DC
REAR PARKING SENSORS	Integrated Rear Parking Assist System
SAFETY	
SMOKE /CO2 ALARM	RV Safe RVCOLP-2 – 12V DC Combination CO and LP Gas Detector
SAFETY KIT	First Aid Kit and Fire Extinguisher
WARRANTY	
GRECH RV WARRANTY	- 3 Years up to 36,000 Miles Limited Warranty. - Grech RV warranties the specific motorhome to be free from manufacturing defects in materials and craftsmanship on portions manufactured by Grech RV under normal wear and tear. Individual components may carry their own respective warranty.
MERCEDEZ-BENZ WARRANTY	**Basic Limited Warranty:** - 3 years or 36,000 mi **Engine Limited Warranty:** - 5 years or 100,000 mi **24/7 - 365 Mercedes-Benz Roadside Assistance:** - 3 years or 36,000 mi

VACANZA NO EXT FRONT AND REAR VIEW | AWD

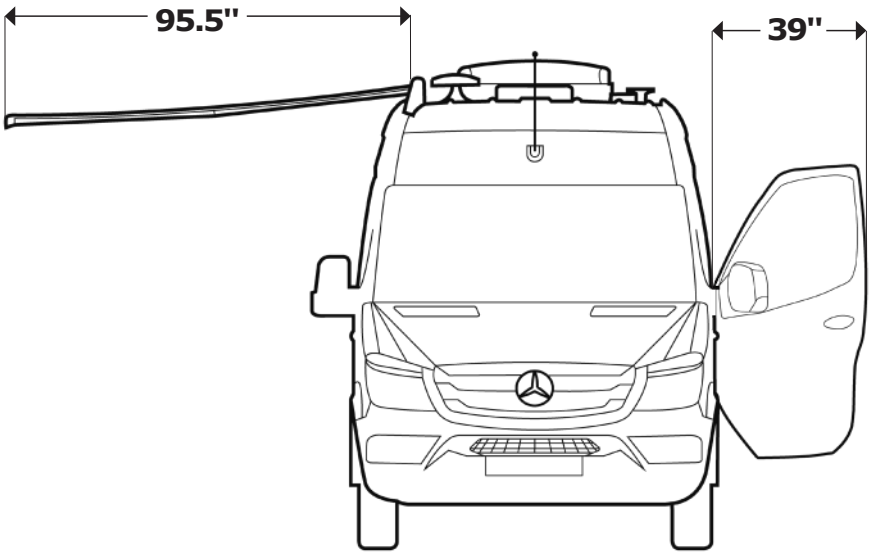

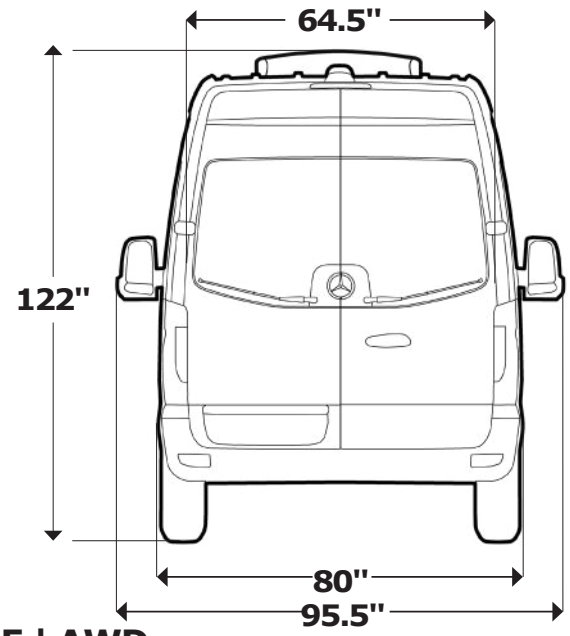

VACANZA NO EXT SIDE VIEW | PASSENGER SIDE | AWD

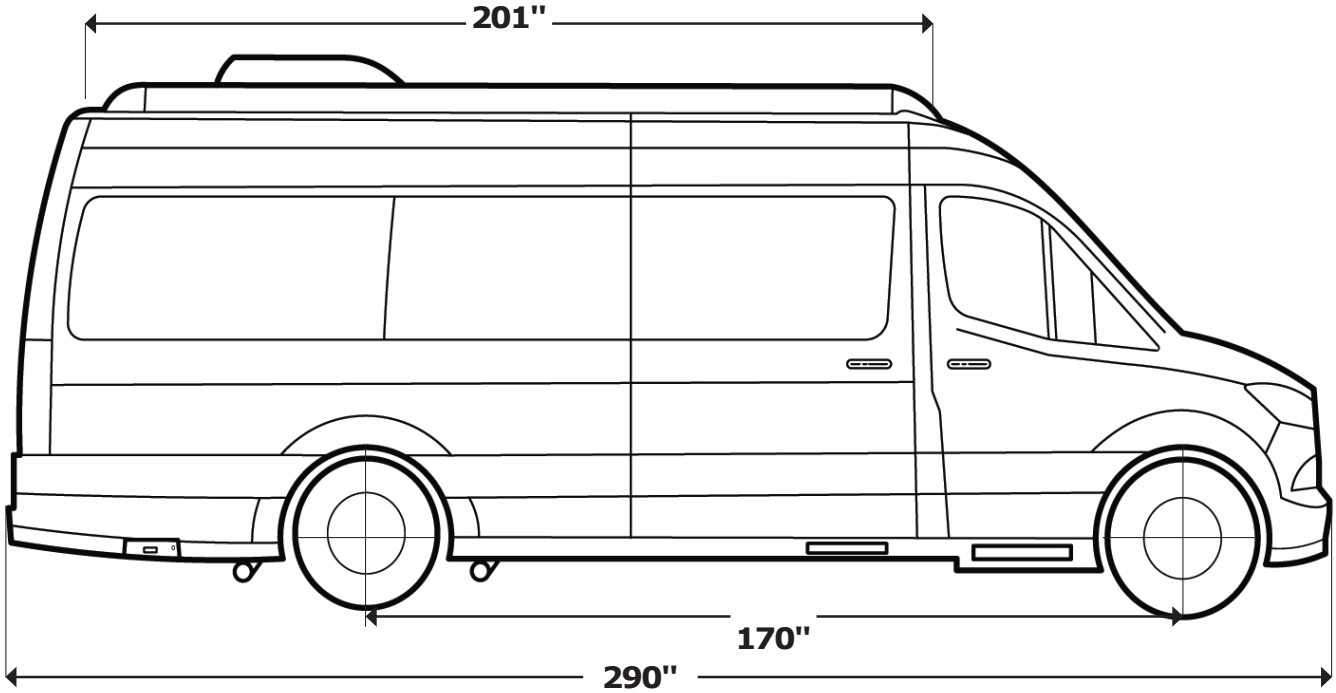

GRECH RV LIMITED WARRANTY

MANUFACTURER'S ROLE

Grech RV is the final-stage manufacturer of a previously incomplete vehicle built and separately warranted by the chassis manufacturer. For all Sprinter-based models, that manufacturer is Mercedes-Benz.

Grech RV warrants the components, systems, and craftsmanship added during the RV conversion. Mercedes-Benz provides separate warranty coverage for the base vehicle (chassis, powertrain, and related systems).

WARRANTY COVERAGE BY GRECH RV

Grech RV warrants that the vehicle, under normal use and service, will be free from defects in materials and workmanship on portions manufactured by Grech RV.

- **Warranty Term:** 36 months or 36,000 miles, whichever occurs first, from the date of first retail purchase.
- **Repairs:** Must be performed by an authorized Grech RV dealer or service facility.
- **Repair Authorization:** A Repair Authorization Number (R.A.N.) must be obtained before warranty repairs are performed. Unauthorized repairs may result in denied reimbursement.

Grech RV guarantees the vehicle against manufacturing defects under normal wear and tear. Individual appliances and components are covered under their respective manufacturer's warranties.

MERCEDES-BENZ WARRANTY COVERAGE

The Mercedes-Benz chassis carries its own warranties:

- **Basic Limited Warranty:** 3 years / 36,000 miles
- **Diesel Engine Limited Warranty:** 5 years / 100,000 miles
- **Roadside Assistance:** 3 years / 36,000 miles

CUSTOMER RESPONSIBILITY

- Review and understand all manuals included with your RV.
- Perform regular maintenance as outlined in Grech RV and OEM manuals.
- Return your RV to an authorized Grech RV dealer for warranty repairs.
- Failure to follow proper maintenance may result in conditions not covered under warranty.

WHAT THE WARRANTY COVERS

The Grech RV Limited Warranty covers:

- Defects in materials and workmanship for Grech RV–installed components.
- All labor costs associated with repair or replacement of defective parts, provided prior authorization is obtained.

Repairs may be performed with new or remanufactured parts of equal quality. Cosmetic items (trim, upholstery, paint) that show defects at delivery must be reported within five (5) days of purchase.

WARRANTY LIMITATIONS

- This warranty is limited to what is expressly written
- No dealer or individual is authorized to alter or extend warranty terms.
- The warranty applies only to Grech RV–manufactured portions of the vehicle.
- The dealer is an independent entity, not an agent of Grech RV.

ADJUSTMENT COVERAGE

- **90 Days/Unlimited Miles:** Adjustments to compartment latches, bulbs/LEDs, fuses, smoke/CO detector batteries.
- **1 Year / 12,000 Miles**: Fabrics, window seals, caulking, floor coverings, striping, paint on plastic moldings.
- **3 Years / 36,000 Miles:** Exterior painted surfaces.

WARRANTY PROCEDURES

1. Authorization Required: Pre-authorization and an R.A.N. must be obtained before any warranty work.

2. Repair Options:

- At Grech RV Service Department, Riverside, CA
- At an authorized Grech RV service facility.
- At another service shop with prior Grech RV approval.

3. Chassis Repairs: Must be handled at an authorized Mercedes-Benz dealer under their warranty program.

EMERGENCY REPAIRS

- Emergency repairs may be done at non-authorized facilities but must be pre-approved by Grech RV.
- Unauthorized emergency repairs may not be reimbursed
- Warranty transfer to subsequent owners is permitted with a submitted warranty transfer form.

CAUTION

If towing becomes necessary: *Always follow Mercedes-Benz guidelines for towing procedures.*

WHAT THE WARRANTY DOES NOT COVER

1. Vehicle Modifications & Unauthorized Alterations

- Vehicles altered outside our factory in any way that, in Grech RV's sole opinion, may affect stability, operation, or reliability.
- Unauthorized changes, including repairs, alterations, variations, or modifications.
- Items added or changed after the vehicle leaves Grech RV's possession.
- Vehicles declared a total loss by an insurance company or designated by Grech RV as "salvage," "junk," "rebuilt," or a similar classification.

2. Neglect, Misuse, and Owner Responsibilities

- Damage caused by failure to seek repairs on time.
- Damage caused by failure to use reasonable efforts to mitigate damage caused by defects
- Damage resulting from failure to comply with the instructions set in the Owner's Manual.
- Vehicles subjected to misuse, negligence, or accidents, in Grech RV's sole opinion.

3. Environmental Conditions and Storage

- Damage while stored in exterior storage compartments. Compartments may not be moisture-free due to weather and humidity.
- Condensation and its effects, including but not limited to water damage, mold, and mildew. Mold and mildew are natural growths and are not covered.
- Damages caused by hail, tornadoes, lightning, floods, earthquakes, hurricanes, fire, rain, and other environmental conditions.
- Environmental factors such as tree sap, tar, chemicals, oils, salts, road hazards, stone chips, and airborne pollutants.

Infestations or damage caused by rodents.

4. Wear and Tear

- Deterioration due to normal wear, usage, or exposure, including fading, discoloration, rust, corrosion, oxidation, and cosmetic blemishes
- Flaking, peeling, chips, or exterior damage caused by rocks, road hazards, or environmental exposure.
- Defacing, scratching, dents, and chips on any surface or fabric not caused by Grech RV.

5. Routine Maintenance and Design Limitations

- Routine maintenance, including wheel alignments.
- Items functioning as designed, but the owner is dissatisfied with the design.

6. Chassis and Powertrain

- The automotive chassis and powertrain are covered by the chassis manufacturer's warranty. This includes, but is not limited to: powertrain, engine, steering, handling, tires, batteries, gauges, and muffler.

7. Appliances and Components Covered by OEM Warranties

- Microwave, refrigerator, stove, water heater, televisions, stereo, DVD player, lithium batteries, heating surfaces, Firefly Control System, generator, roof, air conditioners, and all other electronic devices.

8. Incidental and Consequential Damages

- Failure of the coach and/or chassis resulting in incidental damages such as:
  - Loss of stored goods inside or outside the coach
  - Loss of use and equipment of the vehicle
  - Inconvenience
  - Rental vehicle costs
  - Accommodation and travel expenses
  - Towing and meals
  - Other miscellaneous incidental expenses

EVENTS DISCHARGING WARRANTY

Warranty obligations will be void if damage results from:

- Unauthorized repairs or parts.
- Misuse, neglect, off-road use, overloading, collisions, theft, fire, vandalism.
- Odometer tampering.
- Chemical or environmental exposure.

CUSTOMER ASSISTANCE

- Contact your authorized Grech RV dealer.
- If unresolved, escalate to Grech RV Customer Relations:

Grech RV – Service Department
6915 Arlington Avenue
Riverside, CA 92504
Phone: 1-855-994-7324

When contacting, have available:

- VIN, current odometer, dealer name/location and your contact details

NHTSA SAFETY DEFECTS

If you believe your vehicle has a defect related to safety:

- Notify Grech RV and the National Highway Traffic Safety Administration (NHTSA).
- Call the Vehicle Safety Hotline: 1-888-327-4236 (TTY 1-800-424-9153)
- Or visit: www.safercar.gov

NOTES

PRE-TRIP INSPECTION CHECKLIST

Before operating the vehicle, a visual and functional inspection of key systems and components must be completed. Use the checklist below to verify the condition of each item. Any item marked as Fail must be reported immediately and corrected before using the vehicle. Critical failures may result in the vehicle being grounded until the issue is resolved.

	INSPECTION PROCEDURE	PASS	FAIL
1	Check preventative maintenance schedule for services due at present mileage.		
2	Calculate Load Carrying/Payload Capacity.		
3	Check operation of drivers seat and seat belt.		
4	Check operation of steering wheel and shift levers.		
5	Check operation of turn indicators.		
6	Check operation of foot pedals and parking brake.		
7	Check operation of all gauges, for normal reading with engine running.		
8	Check operation of dash indicator lights with key on, engine not started, then again with engine started.		
9	Check operation of ventilation system: heating, defrosters, fans and air conditioning.		
10	Check horn, wipers, washers, and mirrors for cleanliness, adjustment, operation and damage.		
11	Check conditions of fire extinguisher and first aid kit.		
12	Check all doors, glass and windows for operation, cleanliness, and damage.		
13	Check all emergency exits for operation, warning devices, markings, to be free and clear.		
14	Check interior lighting: for operation and damage.		
15	Check exterior lighting for operation and damage.		
16	Check exterior for cleanliness, markings and damage.		
17	Check fuel cap in place and secure.		
18	Check all tires and wheels for tread depth, cracks & bulges, missing lug nuts, and air pressure.		
19	Check engine coolant level.		
20	Check brake fluid level.		
21	Check DEF (Diesel Exhaust Fluid).		
22	Check belts for tension and wear.		
23	Check operation of cameras.		
24	Check operation of audio and video system.		

WARNING

Discontinue operation of the vehicle if a door opens while the vehicle is in motion. *Operating under this condition poses a serious risk of injury or accident.*

NOTICE

Never operate this vehicle until the problem has been resolved. *Ignoring this warning may result in equipment failure or personal injury.*

WARNING

Discontinue operation of the vehicle if any critical item on the pre-trip inspection list fails to pass, or until all problems have been resolved. *Operating the RV with failed inspection items can lead to unsafe driving conditions*

CAUTION

If a door ajar warning light is lit, check all doors for proper closure. *This ensures doors are securely latched before travel.*

PREVENTATIVE MAINTENANCE LIST

Performing regular maintenance helps ensure safe operation, prolongs vehicle life, and reduces the risk of unexpected issues. Use the table below to schedule and track maintenance tasks.

	ENGINE AND DRIVETRAIN	SUGGESTED FREQUENCY
1	Check engine oil level	Every 1,000 miles / monthly
2	Change engine oil and filter	Every 5,000 miles
3	Check transmission fluid	Every 5,000 miles
4	Inspect drive belts	Every 5,000 miles / 6 months
5	Check coolant level and hoses	Monthly

	FLUIDS AND BATTERIES	SUGGESTED FREQUENCY
1	Check brake fluid	Monthly
2	Check DEF (Diesel Exhaust Fluid)	Monthly
3	Check starter (Chassis) battery	Monthly
4	Check house (Lithionics 51V) batteries	Weekly

	CHASSIS AND SUSPENSION	SUGGESTED FREQUENCY
1	Inspect tires for tread, pressure, cracks, bulges	Weekly
2	Inspect wheels and lug nuts	Weekly
3	Inspect suspension components	Every 5,000 miles

	INTERIOR AND SAFETY EQUIPMENT	SUGGESTED FREQUENCY
1	Inspect and test seat belts	Monthly
2	Inspect fire extinguisher	Monthly
3	Inspect first aid kit	Monthly
4	Test interior lights	Monthly
5	Test smoke & CO detectors	Monthly
6	Cycle Timberline Heater System	Every 3 Months

	EXTERIOR AND BODY	SUGGESTED FREQUENCY
1	Test exterior lighting	Monthly
2	Inspect doors, windows, and locks	Monthly
3	Inspect awnings & end caps	Monthly
4	Wash vehicle exterior	Monthly

	WATER, PLUMBING AND HVAC	SUGGESTED FREQUENCY
1	Inspect water tanks and connections	Monthly
2	Inspect water pump & faucets	Monthly
3	Flush water system (drinking water)	Every 3 months
4	Test HVAC system	Monthly

	ELECTRICAL AND ENTERTAINMENT SYSTEMS	SUGGESTED FREQUENCY
1	Inspect house electrical system	Monthly
2	Test inverter / charger	Monthly
3	Test audio / video system	Monthly
4	Test Starlink system	Monthly
5	Inspect all cabin outlets and USB ports	Monthly

VEHICLE PREPARATION AND SAFETY GUIDELINES

Before starting any trip, make sure you are thoroughly familiar with the operation and condition of your vehicle. It is essential to understand all components, features, appliances, and limitations of your RV.

Proper preparation is key to a safe, enjoyable, and successful journey. The time you invest in learning about your vehicle will enhance your comfort and confidence, and help ensure a smooth and rewarding trip.

NOTICE

IMPORTANT – Responsibility of the Owner and Operator: *It is the responsibility of the owner and operator to read, understand, and follow all safety considerations and instructions in this manual, the chassis manual, and the manuals for each appliance and equipment system provided in the RV information kit.*

This manual uses specific safety alerts to highlight important information:

NOTICE

General Safety Reminder: *Highlights potential issues not related to personal injury.*

CAUTION

Risk of Minor Injury or Moderate Damage: *Indicates a hazardous situation which, if noy avoided, COULD result in minor or moderate personal injury and/or damage to the vehicle.*

WARNING

Risk of Serious Injury or Damage: *A hazardous situation that could result in death, serious injury, or major damage.*

DANGER

Risk of Death or Serious Injury: *A hazardous situation that will result in death or serious injury if not avoided.*

PRE-TRIP DRIVING TIPS

1. Refer to the Chassis Manual:

- For instructions on starting, operating, and stopping the engine.

2. Perform Visual Inspections:

- Identify issues before they become problems. Any defect found could result in problems on the road, causing a loss of time and money.
- A systematic inspection conducted prior to moving your vehicle will ensure nothing is overlooked and will assist in familiarizing the owner with the vehicle.

3. Familiarize with Controls:

- The location and height of the driver's seat in the RV is higher and further to the left than in most vehicles. This creates a different perspective of the roadway.
- Rely on the outside mirrors to align with the center of the road and check conditions behind the vehicle.
- The dashboard may contain more gauges and controls than what is normally found in a passenger car.

4. Understand Vehicle Differences:

- Steering and braking controls are power-assisted to make driving as comfortable as possible. Since the RV is higher, wider, and heavier than any automobile, the operator must anticipate and account for these differences.

BEFORE HITTING THE ROAD

Before hitting the road, it's essential to ensure your vehicle is properly prepared for safe and comfortable travel. This includes checking weight distribution, tire condition, and interior air quality, as well as taking safety precautions.

The following information will help you get your vehicle ready for each trip and avoid common issues that may affect performance or passenger well-being.

SAFETY AND CARE TIPS

1. Safety Precautions

- Be extremely cautious when handling flammable items such as cigarettes, matches, or any hazardous materials
- Carelessness can significantly increase the risk of fire, injury, or property damage.

2. Weight Distribution

- Proper weight distribution is essential for safe driving
- Always account for added cargo, passengers, and the weight of fresh and waste water tanks.
- Overloading or uneven weight distribution can negatively impact handling, braking, and overall vehicle safety.
- If you plan to use all storage compartments, you may need to reduce your water load to stay within safe weight limits.
- When possible, connect to a city water supply at your destination to minimize the onboard water weight during travel and free up storage space.

3. Tires

- Tires must be properly maintained and inflated to perform safely.
- Correct tire pressure ensures stability, proper load carrying, good traction, and even tire wear.
- Improper inflation can lead to poor handling, premature wear, or sudden tire failure.
- Before any trip, make sure to follow the correct tire pressure found on the Tire Pressure Label. If one side of an axle carries more weight than the other, inflate both tires based on the heaviest side.

4. Mold

- Mold and mold spores are naturally present in the air, both indoors and outdoors.
- While it's impossible to eliminate all spores, you can control indoor mold growth by keeping the interior dry and well-ventilated.
- Avoid long-term moisture buildup to prevent mold issues.

5. Chemical Sensitivity

- It's normal to notice a strong smell when entering your vehicle for the first time.
- This odor comes from materials like carpet, upholstery, plywood, insulation, and linoleum, which release gases after manufacturing.
- Because an RV is a compact, enclosed space, these odors may feel more intense compared to a home or car.
- This is not a defect. To reduce any discomfort, ventilate the interior by opening windows and doors when possible. Over time, the odor will naturally fade.

NOTICE

Tire Pressure Importance: *Incorrect tire pressure reduces safety, fuel efficiency, and tire life. Check tire inflation regularly and adjust according to the heaviest side of the axle when loaded.*

CAUTION

Hazardous Materials Awareness: *Avoid storing or transporting hazardous materials inside the vehicle. These can create unsafe conditions in the event of a leak, spill, or heat exposure.*

WARNING

Fire Hazard- No Smoking: *Do not smoke or use open flames (matches, lighters, etc.) near the vehicle. Flammable materials or vapors may be present and could ignite.*

DANGER

Weight Overload Risk: *Overloading the vehicle or unevenly distributing cargo can lead to loss of control, brake failure, or tire blowouts. Always stay within the specified weight limits and distribute weight evenly.*

SAFETY CHECKLISTS

EXTERIOR CHECKLISTS

Before entering your RV, follow these steps:

1. Tire Inspection: Check for wear and ensure tires are properly inflated according to specifications on the Tire and Loading Information.

2. Exterior Component: Secure or disconnect all exterior attachments.

3. Components: Ensure all exterior compartments and fill ports are closed and locked.

4. Secured Items: Confirm that anything tied or mounted to the vehicle is fastened.

5. Fluid Levels: Check engine oil, coolant, and other fluid levels.

6. Lights & Condition: Inspect exterior lights and walk around the vehicle.

7. Safety Clearances: Verify there are no overhead or ground obstacles nearby.

8. Personal Belongings: Make sure all items are safely stored.

9. Hitch Cover: If not towing, confirm that the hitch cover is in place and secured.

NOTICE

Check for Fluid Leaks Before Departure: *Before driving, look under the vehicle for signs of oil, coolant, or fuel leaks, which could indicate a serious issue requiring maintenance.*

CAUTION

Compartment Doors Must Be Locked: *Driving with exterior compartments or water fill ports unlocked can cause them to open on the road, leading to loss of items or collision damage.*

WARNING

Loose Exterior Items Can Cause Accidents: *Unsecured awnings, antennas, or cables may detach while driving, creating road hazards and damaging your vehicle or others.*

WARNING

Inadequate Clearance May Lead to Injury or Damage: *Always check for low-hanging tree limbs, signs, or power lines. Striking overhead obstacles can result in serious damage or personal harm.*

DANGER

Overlooking Tire Damage Can Lead to Blowouts: *Driving with underinflated or damaged tires increases the risk of a blowout, which can result in loss of vehicle control and a serious crash.*

INTERIOR CHECKLISTS

Before driving your RV, follow these steps:

1. Refrigerator: Ensure the door is closed and latched.

2. Loose Objects: Secure items on countertops or shelves to prevent movement.

3. Cabinet Load: Store heavy items in lower cabinets.

4. Food & Liquids: Secure to prevent spills.

5. Doors: Close and lock all doors.

6. Storage: Verify all interior compartments are secured.

7. Lighting & Switches: Position switches safely for travel.

8. Driver Seat Adjustment: Adjust only while parked.

9. Seat Belts: Ensure all passengers are buckled.

10. Mirrors: Adjust mirrors for optimal visibility.

11. Child Seats: Use approved car seats when needed.

12. Fire Extinguisher: Ensure fire extinguishers are charged and accessible.

NOTICE

Double-Check Refrigerator Lock: *Even if the refrigerator appears closed, make sure it's latched. A sudden turn can cause the door to swing open, spilling contents.*

NOTICE

Check Lighting Controls Before Departure: *Make sure all lights and switches are in the proper position to prevent battery drain or unnecessary electrical use while driving.*

CAUTION

Heavy Items Stored Overhead May Fall: *Avoid placing heavy or sharp objects in upper cabinets, as they may shift during travel and fall when cabinets are opened.*

CAUTION

Adjusting the Driver's Seat While Moving Is Hazardous: *Changing seat position while driving can affect your control of the vehicle. Only make adjustments when the RV is parked.*

WARNING

Unsecured Items Can Become Dangerous Projectiles: *Loose items such as electronics, dishes, or utensils can fly through the cabin during sudden stops or sharp turns, causing injury to occupants.*

WARNING

Improper Mirror Adjustment Limits Visibility: *Ensure mirrors are properly positioned before starting the engine to reduce blind spots and improve road awareness.*

DANGER

Improperly Installed Child Seats Can Result in Severe Injury or Death: *Always follow the manufacturer's installation instructions and use federally-approved child safety seats appropriate for the child's age and size.*

DRIVING SAFETY TIPS

Driving an RV requires more attention and planning than driving a standard vehicle. Its size, weight, and unique handling characteristics demand extra caution—especially when braking, turning, or backing up. This section offers helpful tips to make your driving experience safer, smoother, and more confident on every trip.

1. Backing Assistance: When reversing, ask someone to stand at the rear driver's side to help guide you into place.

2. Seatbelt Usage: Make sure everyone is wearing their seatbelt while the vehicle is moving. Avoid using beds or seats without belts during travel.

3. Secure Interior Items: Before driving, close all doors and secure cabinets, drawers, and any loose items that might move or fall during travel.

4. Fire Safety: Review basic fire safety steps with your passengers and make sure the fire extinguisher on board is fully charged and accessible.

5. Tire Maintenance: Check your tire pressure regularly—especially before driving and when refueling. Proper pressure improves safety and performance.

6. Emergency Preparedness: Keep a cell phone on hand for emergencies. Don't drink or text while driving. Use hands-free devices if you need to make calls.

7. Defensive Driving: RV vehicles need more time to stop and speed up. Leave extra space between vehicles and always stay alert for sudden changes on the road.

8. Mirror Usage: Large blind spots are common in RVs. Use mirrors frequently, signal well in advance, and always double-check before changing lanes.

9. Braking Techniques: Your RV needs more distance to stop. Drive at a safe speed and keep space between you and the vehicle in front to brake gradually.

10. Steep Hills and Downhill Slopes: RVs can struggle on steep roads. Use lower gears when going uphill, and monitor engine temperature. When going downhill, avoid riding the brakes—shift down and control speed with the engine.

11. Road Placement: Stay centered in your lane. Your RV is wider than a regular car and may need more space on either side.

12. Turning Maneuvers:

- Make wide turns—especially to the right. Plan ahead and stay near the center of your lane to avoid clipping curbs or other vehicles.

13. Parking Precautions:

- If you're unsure while parking, ask someone to guide you. Remember that trailers move in the opposite direction when reversing.

NOTICE

Safe Following Distance: *Always allow extra space between your RV and the vehicle ahead. Due to the RV's weight, stopping distances are significantly longer. Tailgating could result in a serious collision.*

NOTICE

Wind Sensitivity: *RVs are more susceptible to strong winds. Reduce speed during gusty conditions and maintain a firm grip on the steering wheel.*

CAUTION

Brake Overheating Risk: *Use lower gears and avoid constant braking to prevent brake failure on downhill slopes.*

CAUTION

Overhead Clearance: *Know your vehicle's full height, including air conditioners or antennas, and always check for clearance when entering parking garages, underpasses, or tree-covered areas.*

CAUTION

Tire Blowout Risk: *Driving on underinflated or overloaded tires can cause overheating and tire failure. Regularly inspect tire pressure and condition before and during trips.*

WARNING

Sharp Turns and Sudden Maneuvers: *Abrupt steering can cause loss of control or tipping. Take turns slowly and avoid sudden lane changes.*

DANGER

Carbon Monoxide Risk: *Never run the engine, or any fuel-powered appliance in an enclosed area. Carbon monoxide is deadly and odorless. Always use CO detectors.*

BACKING UP

Backing up can be difficult, whether you're new to RVing or have lots of experience. Use your mirrors, the backup camera, and help from a co-pilot to back up safely. It's a good idea to practice in a large parking lot before going on a trip.

Start While Moving Forward

- Begin the backing-up process while the RV is still rolling slowly forward. This helps line up the vehicle smoothly.

Line Up With a Reference Point

- Steer the vehicle so it lines up with a sign, post, or other visible point. This will help you back in a straight line.

Check Visibility

- Make sure the parking area is clearly visible in both side mirrors. A good view makes the process easier and safer.

Use Road Markings

- Look for painted lines or other marks on the ground to guide you as you back up.

NOTICE

Backing up works best as a team effort: *Practice ahead of time, use your tools, and rely on clear visual cues to make parking easier and more accurate.*

NOTICE

Backing Up Safely: *If your destination does not have a pull-through site, try to choose a level site on the driver's side for better visibility.*

BACKING UP PROCEDURE

If there's no available spot on the driver's (left) side, the right-side mirrors must be used—but these have more blind spots and less visibility, so extra caution is needed.

Pre-Backing Safety Check

- Bring the vehicle to a complete stop. Exit and inspect the area for any obstacles such as rocks, low-hanging branches, signs, or posts.

Co-Pilot Positioning

- Your co-pilot should stand at the back roadside corner where they are clearly visible in the mirror.
- Their role is to watch for hazards and give clear hand signals.

Stay Safe

- If you lose sight of your co-pilot, stop immediately until they are visible again.
- If you're unsure about the surroundings, stop and inspect the area before continuing.

Use Communication Tools:

- Walkie-talkies are a great way to improve communication between you and your co-pilot during the maneuver.

CAUTION

Blind Spots: *Use extra care when relying on right-side mirrors, as blind spots are larger and vision is limited.*

MOUNTAIN DRIVING

When driving through hills or mountains, use safe driving habits that fit the road and weather conditions. Take time to learn about the area before your trip so you can be ready for any challenges.

CLIMBING HILLS

- **Use lower gears:** Choose a lower gear when climbing. Lower gears give the engine more power (torque), helping the vehicle move uphill more easily.
- **Transmission Tips:** The transmission will usually shift to a lower gear by itself during long climbs. If it keeps shifting up and down too much, change to a lower gear manually and stay there while climbing. This helps protect the transmission from extra wear.

DESCENDING HILLS

- **Use a Lower Gear:** When going downhill, shift to a lower gear. This helps you avoid using the brakes too much. Constant braking on long hills can wear out the brakes, cause overheating, and make it harder to control the vehicle.
- **Use Engine Braking:** Let the engine help slow down the RV by staying in a low gear. This reduces the need to use your brakes and helps prevent overheating.
- **Avoid "Pumping" the Brakes:** Don't keep tapping or "riding" the brakes while going downhill. This can overheat them and reduce how well they work. Instead, press the brakes firmly for a short time to slow down, then release them.
- **Downshift Early:** Before you start going downhill, shift into a lower gear so the engine can help control your speed right from the start. Keep an eye on your speed as you go.

NOTICE

Matching Gear Selection: *Use the same lower gear position when descending that you used to climb.*

CAUTION

Brake Wear Risk: *Extended use of brakes may cause overheating or even brake failure, resulting in loss of vehicle control.*

ON THE ROAD DRIVING TIPS

Although your RV is designed for comfortable and safe highway travel, it requires extra care and awareness compared to standard vehicles. Keep the following tips in mind when driving:

Acceleration and Passing:

- Your RV takes more time to accelerate than a regular vehicle. Plan well ahead when passing, especially on inclines. Allow more space and pass with caution.

Hill Climbing:

- Use lower gears when climbing hills to maintain engine power and avoid frequent shifting. Monitor engine temperature when under heavy load.

Descending Hills:

- Downshift before descending to use engine braking. Avoid prolonged brake use to prevent overheating and maintain vehicle control.

Visibility and Blind Spots:

- Use mirrors frequently. RVs have large blind spots, so check your surroundings often and signal early when changing lanes.

Vehicle Dimensions:

- Always be aware of your RV's height and width.

Distraction-Free Driving:

- Avoid distractions while driving. Use hands-free devices only, and never text or hold a phone while the vehicle is in motion.

Defensive Driving:

- Drive defensively. Maintain a safe distance from other vehicles, stay alert to changing traffic conditions, and anticipate braking or turning needs early.

NOTICE

Drive with Awareness: *RVs are larger, heavier, and slower to respond than regular vehicles. Always adjust your driving style accordingly.*

SEAT BELT SAFETY GUIDELINES

For everyone's safety, always wear your seat belt while the vehicle is moving. The driver's seat and all passenger seats made for travel have seat belts. Do not sit on beds or other seats without seat belts when the vehicle is moving.

To stay safe:

- The driver and front passenger seats must stay locked in the forward-facing position whıle driving.
- Fasten your seat belt by pulling it from the retractor and clicking it into the buckle until you hear a "click."

SEAT BELT SAFETY BEST PRACTICES

- **Proper Fit:** When going downhill, shift to a lower gear. This helps you avoid using the brakes too much. Constant braking on long hills can wear out the brakes, cause overheating, and make it harder to control the vehicle.
- **Child Safety Seats:** All children under a certain age or weight (as required by your local laws) must ride in an appropriate child safety seat. These should be properly installed using the seat belt or LATCH system if available.
- **Pregnant Passengers:** Pregnant individuals should wear the lap belt low across the hips and below the belly, not across it. The shoulder belt should rest between the breasts and to the side of the belly.
- **Passenger Awareness:** Make sure all passengers are aware of seat belt usage rules before the trip begins. A quick reminder can improve safety, especially for new travelers.
- **Weather Conditions:** In slippery or sudden stop situations (like rain, gravel, or downhill slopes), seat belts play a crucial role in keeping you in position and reducing the risk of injury.

NOTICE

Buckle Check: *Always double-check that the buckle is fully engaged and not accidentally latched into the wrong seat belt buckle.*

CAUTION

For optimal safety:
Seat Belt Attachment:
- Use seat belts exclusively on permanently mounted seats.
Individual Use:
- Do not use a single seat belt for more than one person.
Following these guidelines ensures the effectiveness of seat belts and enhances the safety of each occupant during travel.

CAUTION

Avoid Twisted Belts: *Always check that the belt lies flat across your chest and lap. A twisted belt will not provide full protection and may cause injury.*

WARNING

Improper Use of Seat Belts Can Cause Injury: *Never place the shoulder part of the seat belt behind your back or under your arm. Doing so can reduce protection and cause serious injury during an accident.*

WARNING

Children and Seat Belts: *Seat belts are not a substitute for approved child safety seats. Children under the legal age or weight limit must use a federally approved child restraint system.*

WARNING

No Modification Allowed: *Do not modify, disable, or remove any seat belt or related component. Doing so can reduce its effectiveness and may violate safety regulations.*

CARE FOR SEAT BELTS

Keeping your seat belts clean and in good condition is important for your safety. Follow these tips:

Cleaning:

- Use mild soap and warm water.
- Don't use bleach, harsh cleaners, or anything that could damage the belts.

Regular Checks:

- Look for damage like frays, cuts, or loose parts.
- Check the belts often to make sure they still work well.

After a Severe Accident:

- In the event of a sever impact, consider replacing the whole seat belt even if it doesn't look damaged.

DRIVING CAUTIONS

Driving an RV requires greater awareness of your surroundings than a standard vehicle. Your vehicle's weight, size, and turning radius must be taken into account while maneuvering through city streets, highways, or mountain roads. The tips below are designed to help you avoid common hazards and improve your driving confidence.

- **Edge of the Road:** Avoid driving too close to the road's edge. Soft shoulders may not support the RV's weight.
- **Lane Positioning:** Keep your RV centered in the lane to maintain equal spacing from lane edges.
- **Work Zone Awareness:** Use extra caution in work zones. Narrow lanes and uneven pavement may cause instability.
- **Debris Awareness:** Stay alert for road debris. It can damage the undercarriage or get lodged between dual rear wheels, damaging tires or rims.
- **Adapting to Speed Limits:** Speed limits are based on passenger cars. Adjust your speed based on RV driving conditions, especially on curves or mountain roads.
- **Downgrade Speed:** Set your downhill speed at least 5 mph lower than your uphill climbing speed, or a speed that can be safely reduced with brakes in 3 seconds.
- **Following Distance:**
  - Use the **4-second rule** when driving under 40 mph.
  - Use the **5-second rule** when driving over 40 mph.

WARNING

Road Debris: *Striking or dragging debris can lead to serious undercarriage or tire damage. Always scan the road ahead.*

NIGHT DRIVING

Driving at night reduces visibility and can increase driver fatigue. Preparing both the driver and the vehicle for night travel is essential to reduce risk and stay alert.

- **Rest and Alertness:** Only drive at night if well-rested. If tired, find a safe place to stop.
- **Interior Lights:** Turn off interior lights while driving to avoid windshield glare.
- **Dash Light Dimming:** Dim dashboard lights to reduce eye strain and help maintain focus on the road.

NOTICE

Limited Visibility: *Night time driving makes it harder to see obstacles, wildlife, or road markings. Reduce your speed accordingly.*

LEFT TURNS

Making a left turn in an RV requires more space and planning than in a standard vehicle. Positioning and timing are key to keeping your vehicle clear of traffic and completing the turn safely.

- **Intersection Approach:** Start the turn when the center of the intersection lines up with your hips.
- **Lane Selection:** If two left-turn lanes exist, use the rightmost one—it provides better visibility and more turning clearance.

CAUTION

Clearance Awareness: *Left turns can swing the rear of the vehicle into other lanes. Use mirrors and stay aware of your rear wheels.*

SIDE MIRROR ADJUSTMENTS

Your RV has larger blind spots than a passenger vehicle. Proper mirror adjustment helps maintain visibility, especially when changing lanes, merging, or parking.

- Ensure convex mirrors (the smaller curved ones) are angled to give visibility along the RV's full length.
- Both driver and co-pilot should be able to see around the vehicle's sides.
- Convex mirrors help identify vehicles or objects in blind spots.

NOTICE

Mirror Use: *Check mirrors frequently while driving. Signal early and allow time to adjust.*

RIGHT TURNS

Right turns in an RV require a wider arc to avoid curbs, signs, or lane encroachment. With practice and proper spacing, you'll gain confidence in turning your vehicle safely.

- **Before the Turn:** Check your left mirror to ensure no vehicle is in the left lane. Move slightly left to widen the turning path.
- **Turning Point:** Start your turn when your hips align with the corner and your left rear wheel touches the center lane line.
- **Execution:** Turn slowly and check mirrors to confirm there's enough clearance for the rear wheels and tail swing.

CAUTION

Tail Swing Risk: *The rear of the RV swings wide during turns. Ensure no objects or pedestrians are in your path.*

DANGER

Tight Right Turns: *Cutting a right turn too early can cause the rear wheels to hit the curb or obstacles, leading to tire or body damage.*

WEATHER CONDITIONS

While exploring remote or unfamiliar destinations, you may face unpredictable and severe weather. Staying alert and prepared helps you respond safely to different conditions:

STAYING ALERT TO SEVERE WEATHER

Severe Weather Awareness

- Stay informed with frequent weather updates.
- **Weather Watch:** Conditions are favorable for severe weather—stay alert.
- **Weather Warning:** Severe weather is occurring or about to happen—seek safe shelter immediately.

Flooding Precautions

- Camp at a safe distance and elevation from lakes, rivers, or streams.
- If flooding begins, do not drive. Abandon the vehicle if necessary and return once waters subside.
- Never drive through flooded roads, even if they appear shallow.

Emergency Planning

- Always tell someone where you're going and when you plan to return.
- Keep enough emergency supplies: food, water, medications, and first aid for several days.

NOTICE

Be Weather Aware: *Check the weather forecast before and during travel. This includes your route and destination.*

NOTICE

Share Safety Info: *Ensure all passengers are familiar with basic safety steps for storms, heat, cold, and wind.*

CAUTION

Campsite Selection: *Pick camping areas free of low-hanging branches, near water, or unstable terrain in case of storms.*

CAUTION

Know Your Location: *Be aware of your exact location in case you need to contact emergency services*

GENERAL HANDLING

Your RV is heavier and longer than a car. Know your size and adjust your driving accordingly.

- Acceleration takes longer—be patient when merging or passing.
- Make wider turns and leave more room to maneuver.
- Be aware of height when driving under bridges or canopies.

NOTICE

Height Awareness: *Always know your RV's height. Striking an overhang can cause severe damage or injury.*

WET CONDITIONS

Driving in wet weather requires caution. Rain reduces visibility and traction, and standing water can impair braking.

- Replace worn tires and keep them properly inflated to prevent hydroplaning.
- Deep water can cause brakes to grab or not work evenly.

CAUTION

Brake Function: *Test brakes gently after driving through water to ensure they respond properly.*

WARNING

Hydroplaning Hazard: *Even shallow water can cause loss of control. Slow down during heavy rain.*

EXTREME HOT WEATHER

Hot weather affects engine performance, tire pressure, and vehicle cooling. Monitor systems closely when temperatures rise.

- Tire pressure increases in heat—check it more often.
- Don't release air from hot tires—they'll adjust when cooled.
- Inspect belts and hoses for cracks or signs of wear.

NOTICE

Cooling System: *Unusual gauge readings may mean overheating—pull over and let the engine cool.*

COLD CLIMATE CONDITIONS

Cold conditions impact traction and visibility. Prepare ahead and take your time driving in snow or ice.

- Drive slowly and smoothly to avoid slipping.
- Use washer fluid with antifreeze.
- Keep wipers in good shape and steps ice-free.

DANGER

Ice Risk: *Ice buildup on steps and handles can lead to serious falls. Always inspect and clear them before entering or exiting.*

HIGH WIND HANDLING

Strong winds can cause swaying, drifting, or tipping. Drive with extra care in open or elevated areas.

- Reduce speed to stay in control.
- If wind gets too strong, stop and park facing into the wind.
- Avoid large gaps between wind-blocking structures and open road.

WARNING

Wind Gusts: *Sudden wind can push your vehicle sideways. Keep both hands on the wheel and stay alert.*

FIVE DIRECTIONAL SIGNALS

When the co-pilot guides the driver, use five clear signals, one at a time, with confidence. These signals are designed for easy comprehension through the driver's mirror. Refrain from issuing additional signals until the driver has initiated the desired motion.

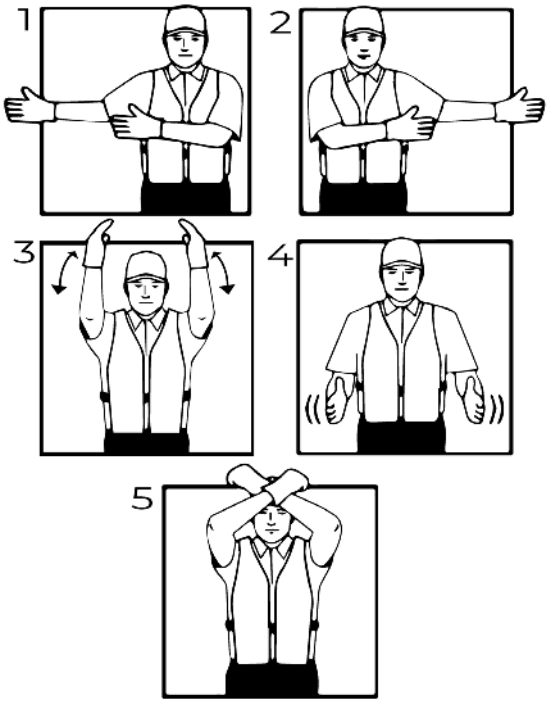

NOTICE

Safe and Controlled Journey: *These five directional signals not only indicate the intended rear movement of the vehicle but are also integral to maintaining a safe and controlled journey.*

CAUTION

Bridge Weight Verification: *Ensure the vehicle's weight aligns with posted tonnage limits on bridges. Signs at bridge entrances provide critical weight-related information.*

CAUTION

Overhead Clearance: *Confirm the posted height of overpasses or areas with limited overhead clearance. Always account for variations due to repaved road surfaces or snow accumulation.*

WARNING

Mirror and Settings Adjustment: *Adjusting vehicle settings, including mirrors, while the vehicle is in motion poses a considerable risk of injury.*

To prioritize safety:

- Perform adjustments only when the vehicle is stationary and safely parked.

- Engaging in these activities while driving diverts attention from the road, increasing the likelihood of accidents, collisions, or loss of control.

- Make adjustments only when the vehicle is not in motion, ensuring the well-being of both the driver and others on the road.

MEANING OF THE FIVE DIRECTIONAL SIGNALS

Both the driver and co-pilot should practice and fully understand these signals:

Go Right:

- **Signal:** Extend the left hand horizontally, forefinger pointing right.
- **Meaning:** Move the rear of the vehicle to the right.

Go Left:

- **Signal:** Extend the right hand horizontally, forefinger pointing left.
- **Meaning:** Move the rear of the vehicle to the left.

Straight Back:

- **Signal:** Both arms and hands parallel, thumbs pointing up and to the rear, in a waving vertical motion.
- **Meaning:** Maintain a straight backward direction.

Distance from Stopping Point:

- **Signal:** Arms held horizontally, palms facing each other, hands open. Start with wide separation and gradually close hands at a rate corresponding to the vehicle's speed.
- **Meaning:** Indicates the distance remaining to the stopping point.

Stop:

- **Signal:** Closed fists and crossed arms.
- **Meaning:** Immediately stop the vehicle.

MIRRORS

Rely on your driving mirrors to assess traffic conditions and the proximity of the vehicle to its surroundings. Mirrors are a helpful tool, but they do not replace direct visual observation—always physically check your surroundings when backing up or maneuvering in traffic. Proper mirror usage is critical for safe backing procedures, lane changes, and highway driving.

NOTICE

Pre-Drive Adjustment:
Before starting the engine:
-Adjust the driver's seat, head restraint, steering wheel, and mirrors as needed.
- Fasten your seat belt to ensure safety.

CAUTION

Passenger Mirror Use: *There is a risk of misjudging distances when using the passenger-side mirror. Always exercise extra caution and pay close attention to accurately assess distances while utilizing the passenger mirror.*

OPERATING THE OUTSIDE MIRRORS

Adjustment Before Driving

- Set mirrors to your preferred positions before starting the vehicle.
- Ensure clear visibility of surrounding areas.

Regular Checks

- Periodically check and adjust mirrors while driving to maintain optimal visibility.
- Be careful not to distract yourself from the road.

Blind Spot Awareness

- Use mirrors to monitor blind spots, but always perform visual checks over your shoulder before changing lanes.
- Exercise extra caution when relying on mirrors alone.

Parking Maneuvers

- Adjust mirrors to aid in parking and reversing maneuvers
- Be mindful of pedestrians, obstacles, and other vehicles in the vicinity.

Avoid Distractions

- Do not adjust mirrors while the vehicle is in motion
- Always prioritize attention to the road over mirror adjustments.

NOTICE

Understanding and practicing proper mirror usage is essential for a safe and secure driving experience, particularly during backing procedures, highway travel, and tight maneuvers.

CAUTION

Shoulder Check: *Always look over your shoulder to ensure you are aware of the actual distance between your vehicle and other road users behind you.*

INFO

Refer to Sprinter Manual: *For detailed instructions on the operation, adjustment, resetting, and general handling of the OEM exterior mirrors, please refer to the Mercedes-Benz Sprinter Operator's Manual.*

FIRE EXTINGUISHER

Fire safety in your vehicle depends on having a properly maintained and legally compliant fire extinguisher. Each unit must be inspected, tested, and clearly labeled to certify that it's in good working condition and ready for use during an emergency.

UNDERSTANDING FIRE EXTINGUISHER LABELS

Each extinguisher must have a visible and legible label that includes:

Instructions and Classification:

- Directions for correct use and the extinguisher's fire classification (e.g., A, B, C) indicating which fire types it can safely extinguish.

Serial and Model Information:

- Key identifiers such as the model number and serial number, specific to your extinguisher.

Fitness Certification:

A statement confirming the extinguisher's operational readiness after testing and maintenance.

Performance Characteristics:

- Discharge time, temperature ratings, and additional technical details specific to that model.

Inspection and Maintenance Info:

- Guidelines for regular upkeep—check the pressure gauge monthly (or more often if exposed to harsh conditions), ensure the nozzle is clear, the pull pin and tamper seal are intact, and confirm that the extinguisher still falls within its specified weight range.

NOTICE

Understanding the Inspection Tag: *Regularly inspect the tag to understand its vital information, and if any adjustments are needed, seek professional help for authorized alterations. This proactive approach strengthens fire safety measures, ensuring a secure environment for yourself and those nearby.*

NOTICE

Recordkeeping & Compliance: *Labels and tags serve as your extinguisher's documented history, confirming it meets safety standards. Following label guidance ensures that the unit performs as expected during emergencies.*

NOTICE

Leading Fire Risks in Sprinters: *According to U.S. Fire Administration reports, the most common causes of fires in Sprinter vehicles are unintentional actions and failures of equipment or heat sources—not natural events. Fires typically originate in the engine compartment, running gear, or wheel area. Due to the range of potential ignition sources, the National Fire Protection Association (NFPA) mandates that all Sprinters be equipped with a B:C rated fire extinguisher to help address flammable liquid and electrical fires.*

CAUTION

Proper Use: *Do not attempt to use the fire extinguisher without understanding its operation. Improper use can result in injury or failure to control the fire.*

CAUTION

Keep Access Clear: *Do not place personal items, bags, or equipment in front of the extinguisher. Quick access in an emergency is critical.*

WARNING

Safety Risk: *Using the fire extinguisher incorrectly or in unsafe conditions can cause personal injury. Always ensure the area is safe before attempting to extinguish a fire.*

DANGER

Awareness of Location: *All occupants—driver, front passenger, and rear passengers—***should always be aware of the fire extinguisher's current location in the vehicle.** *In case of any incident or emergency where its use becomes necessary, knowing its position ensures a quick and safe response.*

TYPES OF FIRE EXTINGUISHERS

Fire extinguishers are categorized by the type of fire they are designed to combat. Each class targets specific fuel sources and must be selected accordingly. For vehicles like Sprinters, the National Fire Protection Association (NFPA) requires a Class 1-A:10-B:C extinguisher due to the variety of potential ignition sources in and around the vehicle.

- **Class A:** Effective against fires involving ordinary combustibles such as wood, paper, cloth, rubber, and plastics.
- **Class B:** Designed for fires involving flammable liquids or gases, such as gasoline, oil, and propane.
- **Class C:** Intended for use on fires involving electrically energized equipment, such as appliances, wiring, or circuit panels.
- **Class D:** Used on fires involving combustible metals like magnesium, titanium, or lithium.
- **Class K:** Specifically for cooking oils and fats, typically found in commercial kitchens

CAUTION

Extinguishing Agent Safety: *The extinguishing agent used in typical vehicle fire extinguishers is non-toxic. However, it may still irritate eyes or airways—use in a well-ventilated space and follow with proper cleanup.*

WARNING

Do not test the fire extinguisher unless absolutely necessary: *Even minimal discharge will reduce internal pressure, which may compromise the extinguisher's effectiveness during an actual emergency.*

PRESSURE GAUGE

Most portable fire extinguishers are equipped with a color-coded pressure gauge that provides a quick visual indicator of the extinguisher's readiness. Knowing how to read this gauge correctly is essential to ensure the extinguisher will perform effectively in an emergency.

GAUGE FEATURES

- **Red zone (Empty):** Indicates that the extinguisher is not pressurized and cannot be used.
- **Green zone (Full):** Confirms the extinguisher is properly charged and ready for use.
- **Yellow pointer (needle):** Shows the current pressure level. It must always be within the green zone.

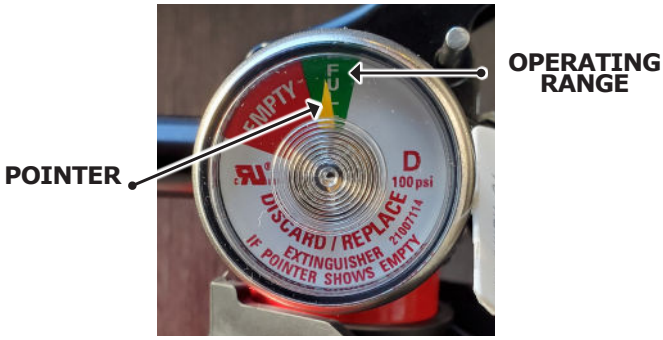

NOTICE

Gauge Must Read Green: *If the pointer on the pressure gauge is not in the operating range (pointer in the green portion of the gauge), immediately replace the extinguisher. Record the inspection date on the tag provided.*

NOTICE

Monthly Check: *Inspect the pressure gauge regularly—ideally once a month. If the yellow pointer is outside the green zone (either undercharged or overcharged), replace the extinguisher or contact a qualified service provider.*

CAUTION

Never Attempt Repairs: *Do not attempt to alter or fix the pressure gauge manually. If it appears damaged, unreadable, or off-range, replace the extinguisher or have it inspected by a certified technician.*

WARNING

Inadequate Pressure: *If the needle points to the red zone labeled "EMPTY," do not attempt to use the extinguisher. It will not discharge effectively in an emergency. Replace it immediately.*

DANGER

Do Not Ignore Labels: *If the white label instructs replacement when the pointer shows "EMPTY," always comply. Continuing to carry or rely on a depleted extinguisher creates a severe safety risk.*

FIRE EXTINGUISHER OPERATION

In the event of a fire, it is essential to stay calm, act quickly, and operate the fire extinguisher properly. This section provides essential tips and instructions to help you respond safely and effectively.

SAFETY TIPS DURING A FIRE

- **Maintain distance:** Stay 8 to 10 feet (about 3 meters) from the fire and position yourself near a clear exit route in case evacuation becomes necessary.
- **Stay low:** Smoke and toxic fumes rise—keep close to the floor to minimize inhalation and maximize visibility.
- **Know your range:** Most portable fire extinguishers have an effective discharge range of 8–10 feet. Aim carefully and remain at a safe distance while discharging.

NOTICE

Family and Passenger Training: *Ensure that all vehicle occupants are familiar with the fire extinguisher's location and trained in its proper use. Review and rehearse the P.A.S.S. method periodically so you can act quickly and correctly in a real fire scenario.*

CAUTION

Limited Time to Act: *Fire situations can escalate rapidly. Only attempt to extinguish the fire if it is small, contained, and you feel confident and safe. If not, evacuate immediately.*

CAUTION

Do Not Get Too Close: *Standing too close to flames may expose you to heat or cause extinguisher blowback. Keep a safe operating distance.*

CAUTION

Do Not Block Escape Routes: *Always keep yourself positioned between the fire and your only exit. Never back yourself into a corner.*

WARNING

Do Not Attempt to Fight Large Fires Alone: *If the fire cannot be quickly controlled, evacuate immediately and call emergency services. Do not endanger yourself or others.the area closely.*

WARNING

Beware of Flashback: *Flammable vapors may reignite after the fire appears extinguished. Continue monitoring the area and do not assume the danger is over.*

WARNING

Notify Authorities First: *Always contact the fire department before attempting to extinguish a fire. A fire extinguisher is a temporary response tool,not a substitute for professional firefighting services.*

DANGER

Never re-enter a burning vehicle or structure to retrieve belongings. *Prioritize your safety and the safety of others. Property can be replaced—lives cannot.*

THE P.A.S.S METHOD

Use the P.A.S.S. acronym to remember the correct steps when operating a fire extinguisher:

- **P–Pull:** Pull the safety pin located at the top of the extinguisher to unlock the handle and hold the unit upright.
- **A–Aim:** Aim the nozzle at the base of the fire, not at the flames. Position yourself about 8 to 10 feet from the fire.
- **S–Squeeze:** Squeeze the handle or trigger to release the extinguishing agent.
- **S–Sweep:** Sweep the nozzle from side to side, covering the base of the fire until it is completely out.

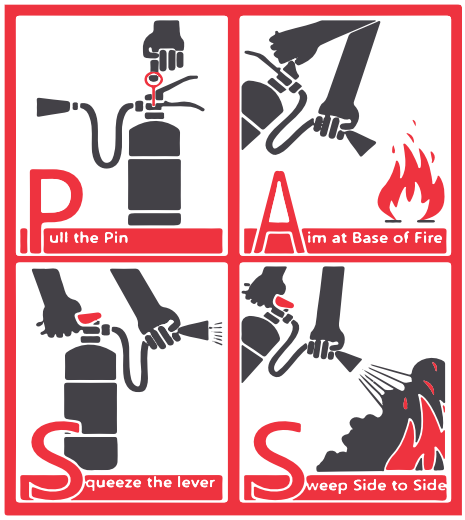

CAUTION

Tamper Seal & Accessibility: *Never break or remove the tamper seal unless in a real emergency. Ensure the extinguisher remains easily accessible and is not blocked by furniture or stored items. Expired or damaged extinguishers must be disposed of according to local hazardous waste regulations. Contact a certified disposal service if needed.*

WARNING

Discharge and Replacement: *After any use, the fire extinguisher must be fully discharged and replaced. Immediately discard and replace the extinguisher if it is dropped, damaged, dented, corroded, or if you notice any discrepancies in condition or performance.* **Do not reuse a partially discharged extinguisher.**

DANGER

Never allow children to handle, operate, or play with fire extinguishers: *Improper use can result in serious injury, accidental discharge, or failure of the extinguisher during an actual emergency. Always store extinguishers securely and out of reach of children.*

FIRE EXTINGUISHER MAINTENANCE

To ensure your fire extinguisher performs reliably in an emergency, routine maintenance is essential. While professional inspections may not be required for portable extinguishers in vehicles, monthly visual inspections and proper care can prevent malfunction and ensure long-term readiness. Here are some key maintenance practices:

1. Visual Inspections

Regularly inspect the extinguisher for:

- Signs of corrosion, leaks, or physical damage.
- A green reading on the pressure gauge, indicating readiness.
- Intact pin and tamper seal.

2. Monthly Checks

Inspect the extinguisher at least once a month, or more frequently if:

- It's exposed to heat, sunlight, or vibration.
- There's risk of tampering or accidental damage.

3. Avoid Partial Discharges

Never partially test the extinguisher. Even minimal discharge can reduce pressure and impair functionality.

4. Address Powder Settling (Compaction):

Over time, the dry chemical agent inside the extinguisher may settle and compact, especially in mobile environments.

- Gently invert and shake the extinguisher to loosen the powder.
- Lightly tap the bottom to break up compacted material, you should feel and hear the powder move freely.

NOTICE

Powder Maintenance Tip: *Periodically inverting the extinguisher prevents powder from compacting—just like flour in a container. This ensures proper discharge when needed.*

NOTICE

Maintenance and Inspections:
- Schedule regular professional inspections and maintenance to ensure the extinguisher remains in optimal condition.
- Keep a log of inspection dates, maintenance activities, and any replacements made for record-keeping and compliance purposes.

NOTICE

Annual Inspection: *Fire extinguishers should undergo a full inspection once a year. During this, confirm:*
- Pin and tamper seal are intact.
- Pressure gauge is in the green zone.
- No damage or corrosion is present.

NOTICE

Pressure Monitoring: *Regularly check the pressure gauge. If the needle is outside the green range, the extinguisher must be replaced immediately.*

CAUTION

Readiness Before Use: *Never operate or travel in the vehicle without verifying that your fire extinguisher is fully charged and accessible.*

CAUTION

Storage and Environmental Conditions: *Do not expose the fire extinguisher to direct sunlight, extreme heat, or freezing temperatures. Avoid storing near corrosive substances or in humid areas that can lead to deterioration of the unit.*

WARNING

Do Not Test Extinguisher: *Do not test the extinguisher unnecessarily. Any release of pressure can render it ineffective in an emergency.*

TOWING

Towing a trailer lets you carry extra gear, but it also changes your RV's handling, performance, and fuel economy. The factory-installed hitch is rated for 5,000 lbs, yet safe towing requires more than just hitch strength—you must respect your vehicle's weight limits, follow best practices for loading, and be prepared for emergencies.

VEHICLE WEIGHT RATINGS

Your certification label (driver's doorframe) lists three critical ratings:

- **GVWR (Gross Vehicle Weight Rating):** Max weight of loaded RV (passengers, cargo, fluids, tongue weight).
- **GAWR (Gross Axle Weight Rating):** Max load per axle (front and rear).
- **GCWR (Gross Combined Weight Rating):** Max combined weight of RV plus trailer and its contents.

NOTICE

Check Label for Accuracy: *Refer to the certification label to verify your exact GVWR, GAWR, and GCWR before loading or towing.*

WARNING

Do Not Exceed Ratings: *Exceeding GVWR, GAWR, or GCWR can cause mechanical failure, brake loss, or unsafe vehicle handling.*

TOWING CAPACITY

Your hitch supports up to 5,000 lbs of trailer plus cargo. Always confirm your specific axle ratings on the doorframe to determine the safe towing limit for your exact vehicle configuration.

NOTICE

Battery Connection: *Ensure the vehicle's battery is connected and charged for proper operation of ignition and electronics during towing.*

NOTICE

Warranty Limitations: *Overloading or improper towing practices may void warranty coverage on certain components.*

NOTICE

Improper Towing: *Improper towing beyond capacity may damage vehicle components and affect warranty coverage.*

CAUTION

Do Not Overload: *Never exceed the towing hitch's 5,000 lb rating. Doing so may cause component failure or dangerous driving conditions.*

IMPORTANT SAFETY NOTES

Before every tow:

- **Legal Compliance:** Follow all local and national towing regulations.
- **Battery Connection:** Ensure the RV's battery is charged and connected for ignition.
- **Automatic Locking:** Disable auto-lock to avoid getting locked out during hooking or unhooking.

NOTICE

Automatic Locking Feature: *Switch off the vehicle's automatic locking before towing to avoid being locked out accidentally.*

SMART LOADING & TOWING TIPS

Proper loading prevents sway, uneven tire wear, and suspension stress:

1. Weight Distribution:

- Position heavier cargo toward the front of the trailer (10–15% tongue weight).
- Balance side-to-side to avoid lean and sway.
- Secure all items to prevent shifting.

WARNING

Trailer Sway Risk: *Uneven loading can lead to instability or sway. Stop and rebalance the trailer if you experience reduced control.*

2. Full Tanks Consideration:

- Water tanks can weigh hundreds of pounds when full. A single gallon weighs about 8.3 lbs.
- Be mindful of how full tanks affect overall weight and balance.

CAUTION

Heavy Fluids Add Up: *Traveling with full tanks can unintentionally exceed GVWR. Recalculate your total weight with full tanks included.*

3. Handling Adjustments:

- Allow for longer stopping distances and slower acceleration.
- Make wider turns and change lanes gradually.
- Confirm trailer brakes are connected and functional.

CAUTION

Adjust Driving Behavior: *Always drive slower and allow more time for braking and maneuvering when towing.*

INFO

Refer to Sprinter Manual: *For comprehensive instructions on towing, including recommended towing capacities, hitch usage, trailer connection, load distribution, braking, and additional safety precautions for OEM equipment, please refer to the Mercedes-Benz Sprinter Operator's Manual.*

LOADING AND WEIGHTS

Understanding these weight terms helps you plan loads accurately:

- **UVW (Unloaded Vehicle Weight):** RV weight with fluids, no passengers or cargo.
- **OCCC (Occupant & Cargo Carrying Capacity):** GVWR – UVW (space for people, cargo, tongue weight).
- **CCC (Cargo Carrying Capacity – Canada):** GVWR – UVW – fresh water – SCWR.
- **Base Curb Weight:** UVW plus standard factory equipment.
- **Vehicle Curb Weight:** Base curb plus dealer-installed options.

NOTICE

Use Certified Scales: *Weigh your loaded vehicle and trailer at a certified public scale to ensure compliance with towing and load limits.*

DETERMINING ACTUAL WEIGHTS

1. **Front Axle Weight:** Front wheels only on the scale.
2. **Rear Axle Weight:** Rear wheels only on the scale.
3. **GVW (Gross Vehicle Weight):** Entire RV on the scale.
4. **Corner Weights:** Each tire individually for precise balance.
5. **Compare:** Verify that the Gross Vehicle Weight (GVW) does not exceed the GVWR. Confirm that each axle's measured weight does not exceed its respective GAWR.

WARNING

Adjust as Needed: *Remove or redistribute cargo until all measurements are within rated limits.*

TOWING IN CASE OF MALFUNCTIONS

- **Axle Damage:** If the front or rear axle is damaged, transport the vehicle on a trailer or transporter to prevent further damage.
- **Transmission Damage:** Remove the propeller shaft before towing if transmission damage is present. Only qualified personnel should fit or remove propeller shafts, and always use new bolts.
- **Towing with Axles Raised:** When towing with the front or rear axle raised, switch off ignition and ensure propeller shafts are correctly installed or removed by qualified personnel.
- **Towing with Both Axles on Ground:** Special precautions are required when towing with all wheels on the ground to prevent damage.

NOTICE

Legal Requirements: *Follow all local laws and regulations related to towing. Consider alternative transport methods like trailer transport when appropriate.*

CAUTION

Volume vs. Payload: *Adequate space does not equal capacity. You may run out of allowable payload weight before you fill all the cargo area. Always respect the payload limit to avoid dangerous handling issues or rollovers.*

WARNING

Recovery Safety: *Never recover a stuck RV with a trailer attached. Pull the vehicle out in reverse if possible, using existing tire tracks.*

WARNING

Recovering a Stuck Vehicle:
- Use extreme caution when recovering a stuck vehicle.
- Never attempt to recover a stuck vehicle with a trailer attached.
- If possible, pull the vehicle backward out of loose or muddy terrain, using the vehicle's previous tracks for smoother extraction.

WARNING

Loading Capacity Limits: *Your vehicle's loading capacity is restricted by both available cargo volume and the maximum payload rating. Even if there's room left, do not exceed the rated payload. Overloading or improper loading can lead to loss of vehicle control or rollover.*

DANGER

Drivetrain Damage Risk: *Towing improperly may result in drivetrain damage or transmission failure, even in short distances.*

DANGER

Improper towing in any of these conditions can cause irreparable damage to the drivetrain or transmission and risk driver safety.

HITCH AND HITCH COVER

The vehicle is equipped with a Rear Receiver Trailer Hitch, which allows safe attachment of trailers, bike racks, or cargo carriers.

The hitch serves as the essential connection point between your vehicle and any towed equipment, such as a trailer, bike rack, or cargo carrier. This vehicle is equipped with a Rear Receiver Trailer Hitch, a versatile and commonly used configuration that allows safe and efficient towing.

HITCH COVER

When the hitch is not in use, the RV includes a hitch cover to protect the receiver opening from dirt, moisture, frost, and UV exposure. This helps prevent rust, corrosion, and premature wear caused by environmental conditions. The hitch cover keeps the receiver clean and ensures it remains in good working condition for future use.

HITCH COVER REMOVAL

To access the hitch receiver for towing, you will need to remove the protective hitch cover. Follow the steps below to remove it safely and prevent damage or loss of parts:

1. Kneel behind the rear bumper of the vehicle.

2. Locate the two screws securing the hitch cover at the bottom corners.

3. Carefully remove the screws using the appropriate tool, ensuring you do not strip them.

4. Pull off the cover and store it in a secure location inside the vehicle.

HITCH COVER REMOVAL

To access the hitch receiver for towing, you will need to remove the protective hitch cover. Follow the steps below to remove it safely and prevent damage or loss of parts:

1. Kneel behind the rear bumper of the vehicle.

2. Locate the two screws securing the hitch cover at the bottom corners.

3. Carefully remove the screws using the appropriate tool, ensuring you do not strip them.

4. Pull off the cover and store it in a secure location inside the vehicle.

NOTICE

Storage Tip: *Keep parts organized. Store the hitch cover and screws in a labeled compartment inside the vehicle to prevent misplacement.*

NOTICE

Weather Protection: *Use a hitch cover during non-use periods. This reduces the risk of moisture buildup and rust, particularly in damp or freezing conditions.misplacement.*

CAUTION

Proper Reinstallation: *Secure all hardware properly. After towing or maintenance, reinstall the hitch cover correctly. Loose screws may cause rattling or fall off during driving.*

WARNING

Hitch Condition Check: *Always inspect the hitch before use. Ensure the receiver is free of cracks, damage, or corrosion. Towing with a compromised hitch may lead to trailer detachment, resulting in serious injury or property damage.*

DANGER

Stay Clear During Operation: *Do not stand behind or under the hitch when the vehicle is in gear or while connecting/disconnecting a trailer. Sudden movement may cause severe injury.*

VEHICLE LABELS

Throughout your vehicle, several labels provide essential safety, identification, and operating information. These labels help ensure proper maintenance, safe loading, and compliance with manufacturer specifications. This section explains the most critical labels you will find on your RV.

VEHICLE MANUFACTURER'S ID

This label, located on the driver's side door jamb, provides vital information for safe operation, servicing, and vehicle loading. It contains specifications related to weight ratings, tire sizes, and other key vehicle identifiers. Understanding and referencing this label helps ensure that the vehicle is operated within safe limits.

Typical information found on this label includes:

- **GM #:** The permanent Grech RV vehicle identification number, which uniquely identifies your unit.
- **VIN #:** The original chassis manufacturer's Vehicle Identification Number (OEM VIN).
- **GVWR (Gross Vehicle Weight Rating):** The max. allowable total weight of the fully loaded vehicle, including passengers, fluids, cargo, and accessories.
- **GAWR (Gross Axle Weight Rating Rear):** The maximum load that the rear axle can safely carry.
- **Date of Manufacture by Grech:** When the final RV assembly was completed at Grech RV.
- **Paint Code:** The specific code for the paint color used on your vehicle.
- **Tires and Rims:** Lists the required tire size, rim specifications, and inflation pressure, which are critical for maintaining load capacity and ride performance.

NOTICE

This label serves as a quick reference to verify weight limits, match replacement tires and rims, and ensure safe operation when loading or towing.

NOTICE

GVWR Significance: *GVWR is the most important specification for safe loading. It includes the weight of the vehicle itself, passengers, cargo, fluids, and any added equipment. Operating over this limit can impair performance and pose safety risks.*

NOTICE

Axle Ratings Matter: *GAWR ensures that each axle is not overloaded. Distributing weight properly and keeping axle loads within their ratings preserves handling and reduces component wear.*

CAUTION

Do Not Overload: *Exceeding the GVWR or GAWR can lead to reduced braking, increased tire wear, suspension damage, and loss of vehicle control.*

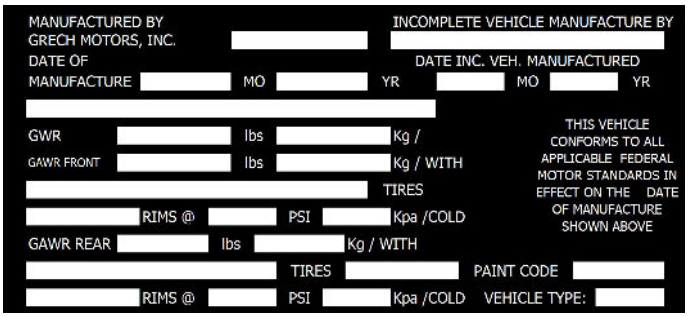

WARNING

Misuse of Information: *Relying on label information from another vehicle model or trim may result in unsafe loading or incorrect maintenance decisions. Use only the label attached to your specific RV.*

APPLICABLE MODELS

This information applies to both Extended and Non-Extended configurations, whether equipped with 2WD or AWD.

TIRE PRESSURE

The Tire Pressure Label provides essential information regarding tire pressure recommendations for optimal vehicle performance, safety, and fuel efficiency. The label specifies the recommended tire pressure for both front and rear tires.

This information is crucial for maintaining proper tire inflation, which affects handling, braking, and tire wear.

This OEM label from Mercedes-Benz is located on the driver's side door jamb. It provides detailed specifications similar to those on the Vehicle Manufacturer's ID Label and includes essential tire information specific to Sprinter-based RVs.

CHARACTERISTICS

- **Cold Tire Pressure:** The recommended tire pressure is provided for cold tires, emphasizing the importance of checking tire pressure when the tires are cold for accurate readings.
- **Tire Size and Type:** The label specifies the tire size and type that the recommended pressures apply to, ensuring compatibility and accuracy.

NOTICE

Benefits of Proper Tire Pressure: *By referencing and following the Tire Pressure Label guidelines, drivers can optimize tire performance, fuel economy, and overall vehicle safety, enhancing their driving experience in your Sprinter.*

NOTICE

Follow Specified Pressures: *Always verify and maintain tire pressures according to the specifications on this label to ensure optimal performance and fuel efficiency.*

NOTICE

Regular Checks Recommended: *Check tire pressures regularly, especially before long trips or when carrying varying loads, to ensure safety and tire longevity.*

CAUTION

Temperature and Storage Effects: *Extreme temperatures and long periods of storage can affect tire pressure. Monitor and adjust accordingly before traveling.*

WARNING

Risk of Loss of Control: *Incorrect tire inflation can affect vehicle handling and braking, potentially leading to loss of control or accidents.*

WARNING

Risk of Overload Failure: *Avoid overloading your RV beyond specified limits as it can lead to tire failure and compromise vehicle handling.*

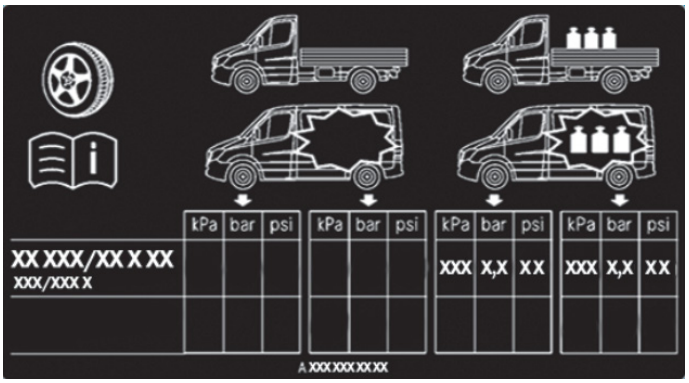

INFO

Refer to Sprinter Manual: *For detailed instructions on OEM jack usage, wheel changes, proper lifting points, and additional safety precautions when handling tires, please refer to the Mercedes-Benz Sprinter Operator's Manual.*

LT-METRIC

LT-Metric refers to Light Truck-Metric, indicating that the tire is designed for use on light trucks. These tires are built to handle higher loads and are appropriate for RV applications. The label outlines tire size, load capacity, and pressure requirements to ensure proper performance under typical driving and load conditions.

PRESSURE AND MEASUREMENT UNITS

The label specifies the recommended air pressures for each tire, shown in kPa, bar, and PSI. These values apply to cold tires, meaning tire pressure should be checked before driving or after the tires have been parked for several hours.

NOTICE

Industry Standards and Compliance: *This label follows practices established by organizations such as The Tire and Rim Association, Inc. (TRA). These standards ensure the information provided is consistent, accurate, and easily understood for safe and reliable tire use.*

IMPORTANCE

Adhering to the LT-Metric specifications is crucial for maintaining performance, safety, and tire durability. Proper tire inflation ensures the vehicle operates safely under various load conditions, improves driving comfort, extends tire life, and reduces the risk of failure.

Regularly referencing this label helps you manage tire maintenance effectively and stay prepared for safe and comfortable travel.

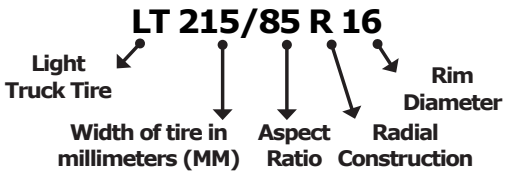

NOTICE

Tire Capacity Requirements: *Do not replace tires with lower carrying capacities than the originals, as this may reduce the vehicle's GVWR and GAWR limits. Using tires with higher capacities than the originals does not increase these limits.*

WARNING

Risk of Blowout and Handling Issues: *Exceeding the recommended load capacity of the tires can lead to overheating, increasing the risk of a blowout. Additionally, overloading the tires can cause handling and steering issues, as well as potential brake failure.*

WARNING

Risk of High-Speed Tire Failure: *Exceeding the maximum speed rating of tires can cause sudden tire failure, leading to loss of vehicle control and potentially causing accidents, serious injuries, and even fatalities for you and others.*

WARNING

Wheel Retorque After Tire Change: *For your safety and that of all passengers, it's crucial to check the wheel tightening after changing a tire and every approximately 30 miles. This prevents wheels from becoming loose and potentially causing an accident.*

TIRE AND LOADING INFORMATION

Located on the driver-side door jamb, the Tire and Loading Information Label provides essential details to ensure your vehicle operates safely and efficiently. This label is provided in addition to the OEM Mercedes-Benz label, and it includes critical specifications relevant to the safe loading and operation of your RV.

Payload information is key to safe operation and helps protect the structural integrity and performance of your RV. Exceeding the specified limits can lead to compromised handling, reduced braking efficiency, and excessive wear on suspension and tires.

OEM TIRE AND LOADING INFORMATION

The Mercedes-Benz label displays:

- Seating capacity (total and by row: front, middle, rear)
- Maximum combined weight of occupants and cargo (in pounds and kilograms)
- Tire size and recommended cold tire pressure for front, rear, and spare tires.

NOTICE

Purpose of the Label: *These values help ensure that your vehicle remains within manufacturer-specified weight and tire limits, which directly affect safety, handling, and ride quality. Please refere to the label on the door jam of your vehicle.*

PAYLOAD INFORMATION

Grech RV-specific payload data is provided on both the Vehicle Manufacturer's ID Label and the Tire and Loading Information Label. This information indicates the maximum allowable weight for occupants and cargo as the RV was built, ensuring safe operation within design limits.

Included in Payload:

- Combined weight of all passengers and their belongings
- Any additional cargo stored inside the RV

NOTICE

Towing Impact on Payload: *When towing, payload must also account for trailer tongue weight or king pin weight, which directly affects your vehicle's overall payload capacity.*

NOTICE

Always Refer to the Label: *To avoid overloading and maintain safe travel conditions, always check the Tire and Loading label for your specific unit's payload and tire specifications.*

NOTICE

Tire Replacement Limits: *Do not install replacement tires with lower load ratings than the original tires, as they may reduce the vehicle's GVWR and GAWR. Tires with higher load ratings do not increase GVWR or GAWR.*

NOTICE

Equipment Additions Affect Payload: *If you install aftermarket or dealer-installed equipment, subtract the added weight from the payload listed on the Tire and Loading label to determine the revised payload capacity.*

NOTICE

Trailer Tongue Weight Counts as Payload: *When towing, remember that trailer tongue weight or king pin weight must be included in the total payload calculation.*

WARNING

Recheck Wheel Tightening: *For your safety and that of your passengers, always recheck wheel torque after changing a tire and after approximately 30 miles.*

WARNING

Exceeding Weight Limits: *Exceeding the vehicle's weight ratings may result in poor handling, structural damage, transmission or engine failure, loss of control, or personal injury.*

WARNING

Payload Overload Risk: *Exceeding the listed occupant and cargo capacity may lead to reduced vehicle stability, increased stopping distances, and risk of tire failure.*

MAX. CLEARANCE

The Max. Clearance Label provides critical information about your vehicle's physical dimensions, including overall height and length, as configured with all roof-mounted components and standard tires. This label is designed to help you travel safely by giving you a clear understanding of how much overhead and space clearance your RV requires.

Located inside the vehicle, this label displays the exact as-built dimensions of your RV, accounting for equipment such as A/C units, antennas, solar panels, and other roof-mounted accessories. By referring to this label before entering areas with height or length restrictions, you can avoid potential clearance hazards and make informed decisions throughout your journey.

KEY BENEFITS OF THE MAX. CLEARANCE LABEL

- **Accurate Dimension Reference:** The label serves as a quick visual reference for your RV's actual height and length, including factory-installed components that affect clearance. This is essential when driving through tunnels, underpasses, drive-thrus, or tree-covered roads.
- **Parking Convenience:** Knowing the total height and length of your RV allows you to evaluate whether it will fit into parking garages, carports, or other enclosed spaces without risk of contact or restriction.
- **Route Planning & Tunnel Safety:** This label helps you avoid restricted roads and low-clearance routes. Use this information when planning GPS navigation or checking posted height limits for bridges, tunnels, and overhangs.
- **Increased Travel Safety:** Staying aware of your RV's physical dimensions helps prevent structural damage to the vehicle and ensures safe operation in tight environments or unfamiliar areas.

NOTICE

Regular Inspection: *Periodically inspect the Max Clearance Labels to ensure they are legible and accurate. Any damage or illegibility should prompt immediate replacement or repair to maintain safety standards.*

CAUTION

Dynamic Load Consideration: *Note that the Max Clearance Labels provide static measurements. Be cautious of dynamic changes in vehicle height, such as air suspension adjustments or cargo load, which can affect clearance.*

CAUTION

Regular Inspection: *Periodically inspect the Max Clearance Labels to ensure they are legible and accurate. Any damage or illegibility should prompt immediate replacement or repair to maintain safety standards.*

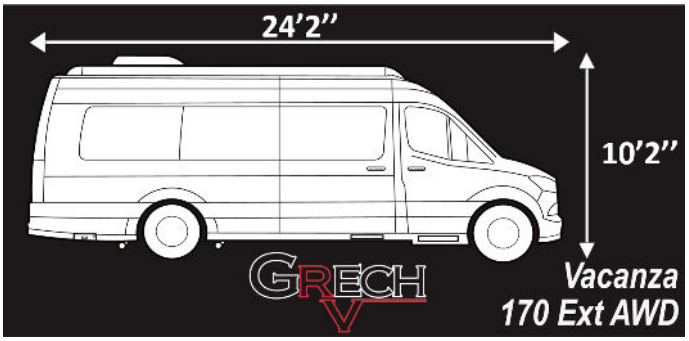

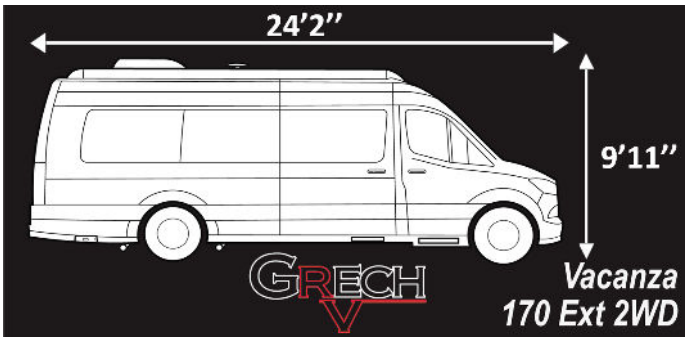

RV VEHICLE INFORMATION

Two important identification labels are located beneath and to the side of the driver's seat in the RV. These labels contain critical information regarding your vehicle's compliance and specifications.

The first label pertains to Vehicle Noise Emission Control and provides information confirming compliance with applicable noise regulations.

The second label contains a broader range of essential data, including:

- **Vehicle Identification Number (VIN):** Uniquely identifies your RV.
- **Gross Vehicle Weight Rating (GVWR):** Indicates the maximum total weight the vehicle can safely carry.
- **Gross Combined Weight Rating (GCWR):** Represents the maximum allowable weight of the RV combined with any towed trailer or cargo.
- **Gross Axle Weight Ratings (GAWR):** Includes both front and rear axle limits, specifying the maximum weight each axle is designed to support.
- **Date of Manufacture (Date of MFD):** Shows when the Mercedes Benz chassis was built.
- **Paint Code:** Used for identifying the exterior paint color, helpful for repairs or touch-up work.

NOTICE

Label Legibility: *Ensure that both labels remain clean, visible, and legible at all times. If either label becomes damaged, faded, or illegible, contact your dealer or manufacturer for a replacement.*

CAUTION

Accurate Reference Required: *Always refer to the information on the manufacturer's label when verifying weight limits or specifications. Relying on incorrect or assumed data may lead to overloading, resulting in potential vehicle damage or safety hazards.*

CARBON MONOXIDE | LP GAS ALARM

The Carbon Monoxide & Propane Gas Alarm (Model RVCOLP-2) is installed on the passenger side of the vehicle, near the galley and passenger seat. This device continuously monitors for the presence of Carbon Monoxide (CO) and propane (LP) gas inside the RV.

CO is a colorless, odorless, and tasteless gas. Propane is odorized, but leaks may still go unnoticed until concentrations become dangerous. The alarm provides an audible warning when hazardous levels of either gas are detected.

HOW THE ALARM WORKS

- **CO Detection:** Senses toxic CO produced by incomplete combustion from sources such as engines, generators, stoves, furnaces, water heaters, and campfires drifting near openings.
- **Propane Detection:** Identifies unsafe concentrations of propane gas inside the RV.
- **Audible Alerts:**
  - **CO Hazard:** Four repeating loud beeps or chirps
  - **Propane Leak:** Continuous beeping tone.
- The sensor only detects gases that reach the alarm's intake openings. Gases in isolated or enclosed areas may not be detected.

ROUTINE TESTING AND INSPECTION

NOTICE

Routine Testing: *Test alarm operation after storage, before each trip, and at least once per week during use.*

NOTICE

Test Button: *The test button confirms electrical function only. It does not verify gas detection capability. To check propane detection, briefly expose the alarm to a small amount of propane or butane for approximately 30 seconds. Ensure no open flames or ignition sources are present.*

CAUTION

Service Check: *If the alarm sounds for CO or propane, or if it indicates a low-battery condition, discontinue use of the RV until an authorized service center inspects the system and identifies the source of the gas or fault.*

CAUTION

Sensitive Individuals: *Children, pets, elderly occupants, and individuals with lung disease, anemia, or heart conditions may be affected earlier or more severely.*

CO & LP GAS ALARM LIMITATIONS

NOTICE

Dry Cloth Only: *Clean the alarm using a dry cloth only. Do not use liquids, sprays, or cleaning chemicals.*

CAUTION

Obstruction: *Do not cover or block the alarm. Airflow is required for proper operation. Alarm will only detect CO and propane gas present at the sensor. Gases may be present in other areas.*

CAUTION

Silicone Damage: *Do not use products containing silicone near the alarm. Examples include adhesives, caulks, lubricants, stain guards, and grooming products. Silicone vapors can permanently damage the sensor.*

WARNING

Gas Limitations: *This alarm detects only carbon monoxide and propane. It does not detect smoke, fire, or other gases.*

POTENTIAL SOURCES OF CO INSIDE AND AROUND THE RV

CO may enter the RV due to combustion from:

1. Nearby RVs or vehicles

2. Campfires or outdoor heating devices

3. Engine or generator exhaust entering through vents, windows, or doors

4. Fuel-burning appliances with excessive spillage or reverse venting, influenced by:

- Wind direction or strong gusts
- Negative pressure from exhaust fans
- Multiple appliances competing for limited air
- Loose or vibrating vent connections
- Obstructed or unconventional vent designs

5. Extended operation of unvented fuel-burning devices (range, oven, etc.)

6. Temperature inversions trapping exhaust gases near ground level

7. Poorly designed or poorly maintained vent systems

UNDERSTANDING THE DANGERS OF PROPANE GAS

- Liquefied petroleum (LP) gas is commonly called propane and is used as fuel for heating and cooking appliances, especially for RVs.
- Propane gas is explosive at the lower-explosive-limit (LEL), which is 21,000 parts per million (ppm). RV Safe will alarm at below 25% LEL.
- Propane gas is denser than air, and will usually accumulate close to the floor. Therefore, RV Safe is placed near the floor in order to quickly detect propane gas leaks.

HEALTH EFFECTS OF CO EXPOSURE

CO reduces the blood's ability to carry oxygen:

- **Mild Exposure:** Slight headache, nausea, vomiting, fatigue ("flu-like" symptoms)
- **Medium Exposure:** Severe headache, drowsiness, confusion, rapid heart rate
- **Extreme Exposure:** Unconsciousness, convulsions, respiratory failure, brain damage, or death.

HEALTH EFFECTS OF CO EXPOSURE

CO reduces the blood's ability to carry oxygen:

- **Mild Exposure:** Slight headache, nausea, vomiting, fatigue ("flu-like" symptoms)
- **Medium Exposure:** Severe headache, drowsiness, confusion, rapid heart rate
- **Extreme Exposure:** Unconsciousness, convulsions, respiratory failure, brain damage, or death.

NOTICE

Carbon Monoxide Poisoning Effects: *Many cases of reported carbon monoxide poisoning indicate that while victims are aware they are not well, they become so disoriented they are unable to save themselves by either exiting the building or calling for assistance. If you experience ANY symptoms of CO poisoning, consult your physician.*

CAUTION

Sensitive Individuals: *Children, pets, elderly occupants, and individuals with lung disease, anemia, or heart conditions may be affected earlier or more severely.*

WHAT TO DO IF THE ALARM SOUNDS

- Immediately move all occupants to fresh air.
- Turn off fuel-burning appliances.
- Ventilate the RV by opening windows and doors.
- Do not re-enter the RV until the source of gas has been identified and corrected.
- Have an authorized service center inspect the vehicle before resuming use.

ALARM FEATURES AND FUNCTIONS

The RV Safe Carbon Monoxide & Propane Gas Alarm (Model RVCOLP-2) includes an 85 dB audible horn, two status LEDs, and a Silence/Test button. The following sections describe the alarm's behavior and outputs in each operational state.

Warm Up State

- The green LED flashes for the first 3 minutes after power-up to indicate the alarm is in warm up period.
- During Warm-Up, the alarm does not detect Carbon Monoxide (CO) or Propane.
- Normal detection begins automatically after the warm up period.

Normal Operation State

- The green LED remains ON when the alarm is functioning properly and no CO or propane gas is detected.
- Pressing the Silence/Test button enters Self Test State.

State	Green LED	Red LED	Audible Horn
Warm-Up (3 mins)	Flashing	OFF	OFF
Normal Operation	ON	OFF	OFF
Power Off	OFF	OFF	OFF
Self Test	OFF	ON/Flashing	4 chirps / constant beeps
CO Alarm (RVCOLP only)	OFF	Flashing	4 chirps
Propane Alarm	OFF	ON	Constant beeps
Alarm Silenced (5 Minutes Max.)	OFF	Flash each second	OFF
Low Battery	Flash each minute	Flash each minute	Chirp each minute
High Voltage	Flash each minute	Flash each minute	Double chirp each minute
End-of-Life or Other Failure	OFF	Double flash each minute	Chirp each minute

NOTICE

Sensor Sensitivity:
Avoid exposure to:
- Water
- Excessive dust or grease
- Cleaning chemicals, sprays, perfumes
- Paint, which blocks airflow
- Silicone adhesives (e.g., hairsprays)
- Corrosive liquids (acids)
- Alkaline metals (e.g., salt spray)

NOTICE

Activation Limitation: *CO and LP gas sensors may not always provide early warning; alarms activate only when maintained and sufficient gas reaches the unit.*

Power Off State

- If no LEDs are illuminated, the alarm has no power.
- Apply power to resume normal operation.

Self Test State

When the Silence/Test button is pressed during normal operation, the alarm performs an internal self-test of the CO sensor, propane sensor and battery voltage

If the self-test passes, the alarm will sound:
1. Two cycles of the CO horn pattern (4 rapid chirps followed by a 4-second pause)
2. Followed by the propane horn pattern (continuous beeping)

Self Test Failure Codes

If the alarm fails the internal self-test, it will enter the Failure State described later in this section.

Result	Alarm Output	Solutions
CO or Propane Failure or End-of-Life	Long beep with red LED blinking	Replace alarm
Low Battery	Long beep with red and green LED on solid	Charge or replace RV battery

NOTICE

Test Button Limitations: *The Test button checks electrical functions only. It does not confirm gas detection capability. To verify propane detection, carefully expose the alarm to a small amount of propane or butane for approximately 30 seconds. Ensure there are no open flames or ignition sources nearby.*

SILENCE/TEST BUTTON

GREEN LED **RED LED** **SENSOR**

CO ALARM STATE

If CO levels exceed the detection threshold, the alarm enters CO Alarm State.

When the alarm horn sounds with a 4-chirp pattern:

1. Press the Silence/Test button.
2. Call local emergency services or 911.
3. Move all occupants to fresh air immediately—outdoors or to an open window/door.

- Conduct a head count to ensure all persons are accounted for.
- Do not reenter the RV until emergency responders confirm that the area is safe and the alarm returns to normal

4. If the alarm activates again within 24 hours, repeat steps 1–3 and contact a qualified appliance technician to inspect all fuel-burning equipment and appliances for CO and LP sources.

- Have equipment serviced immediately if problems are found.
- Review manufacturer instructions for any appliances not inspected.
- Ensure motor vehicles are not operating in enclosed areas near the RV.

PROPANE ALARM STATE

If propane gas exceeds 25% of the lower-explosive limit for more than 30 seconds, the alarm will enter propane alarm state.

If alarm horn sounds with constant beeps:

1. Evacuate everyone from the RV.
2. Shut off propane gas components.
3. Do not touch any electrical switch in or near the RV.
4. Do not start vehicle's engine.
5. Contact a qualified RV or gas technician for repairs.
6. If you cannot reach a gas supplier or qualified service technician, contact the local fire department.
7. Do not turn on gas supply until the leak has been repaired.

ALARM SILENCED STATE

- A CO or propane alarm can be temporarily silenced for up to 5 minutes by pressing the Silence/Test button
- The red LED flashes once per second while silenced.
- After 5 minutes, the alarm will resume sounding if unsafe gas levels persist.

LOW BATTERY SIDE

- If supply voltage drops below 9 VDC, the alarm enters Low Battery State.
- The horn chirps once every minute, and both LEDs flash every minute.
- Alarm performance may be unreliable at low voltage
- Charge or replace the RV battery immediately.

DO NOT DISCONNECT THE ALARM.

END OF LIFE OR FAILURE STATE

The alarm enters Failure State if:

- The CO or propane alarm fails a self-test, or
- The alarm reaches End-of-Life (approximately 5 years of operation)

In this condition:

- The horn chirps once every minute
- Both LEDs perform a double flash every minute

Replace the alarm immediately.

NOTICE

Power Requirement: *Alarms require power; low or disconnected power prevents operation.*

CAUTION

Annual Inspection: *Have a qualified technician check the LP gas system annually or if leaks/malfunctions are suspected.*

CONDITIONS THAT COULD ADVERSELY AFFECT ALARM PERFORMANCE

The following environmental and chemical exposures may reduce performance or cause permanent damage:

PHYSICAL OR ENVIRONMENTAL FACTORS

- Exposure to water, splashes, spray, or condensation
- Excessive dust or grease
- Closed interior doors or obstructions preventing gases from reaching the alarm

CHEMICAL EXPOSURES

- Cleaning supplies or chemical sprays
- Perfume products
- Silicone containing products including adhesives, lubricants, hair sprays
- Corrosive liquids such as acids
- Alkaline base metals (e.g., salt spray)
- High concentrations of hydrogen gas

MAINTAINING YOUR ALARM

- Verify proper alarm function by pressing the Silence/Test button after storage, before every trip and once per week during extended RV use.
- Vacuum the alarm monthly using a soft brush attachment to remove dust.

NOTICE

Do not paint the alarm. Paint may block air flow to the sensor. Exposure to silicone products, silicone vapors, chemical cleaners, or solvents can cause permanent damage to the alarm.

NOTICE

Dealer Assistance: *When contacting the dealer, provide model and serial numbers for faster service.*

CAUTION

Storage Power: *Do not disconnect the detector from the battery during storage. The sensor has a small heater that burns impurities. Power interruption may trigger alarms until impurities are cleared, which may take several hours.*

WARNING

FAILURE TO FOLLOW THESE INSTRUCTIONS MAY RESULT IN FAILURE OF THE ALARM AND WILL VOID THE WARRANTY.

LIMITATIONS OF CO AND PROPANE GAS ALARM

NOTICE

Sensitive Individuals: *Individuals with medical vulnerabilities may require devices that provide audible and visual alerts at CO levels below 30 ppm.*

CAUTION

Continuous Power Requirement: *The alarm requires a continuous power source. It will not operate or sound if power is low or disconnected.*

CAUTION

Sensor Coverage: *The alarm will only detect gas near the sensor. Gas may be present elsewhere in the RV.*

WARNING

Alarm May Not Wake All Occupants: *Alarm signals may not wake deep sleepers, hearing-impaired individuals, children, or those impaired by drugs or alcohol. Emergency exit drills should account for this possibility.*

WARNING

Maintenance and Response Time: *The alarm may not activate early enough if it is not maintained properly or if CO concentrations rise rapidly.*

WARNING

Important Limitations: *CO and propane alarms have been proven to be both effective and reliable, but they may not be effective under all conditions. No alarm/sensor design can offer total protection of life and property.*

WARNING

Medical Limitations: *This device protects against acute CO exposure but cannot guarantee prevention of illness or injury.*

WARNING

Appliance and Ventilation Requirements: *The installation of CO alarms does not replace proper installation, use, and maintenance of fuel-burning appliances, including adequate ventilation and exhaust systems.*

WARNING

Heating Use: *Do not use cooking appliances for comfort heating. Fresh air is required for safe operation.*

DANGER

Carbon Monoxide Hazard: *CO ALARMS CANNOT GUARANTEE THAT YOU WILL NEVER SUFFER ILLNESS OR INJURY FROM EXPOSURE TO CARBON MONOXIDE GAS.*

DANGER

CO Exposure: *Activation of the CO alarm indicates the presence of carbon monoxide, which can kill you.*

INFO

Refer to Component Manufacturer Resources: *For detailed instructions, operation, maintenance, warranty and safety precautions for the RV Safe carbon monoxide and LP gas alarm, please refer to the documentation provided in the component's warranty package or consult the manufacturer's official website.*

SMOKE ALARM

Your vehicle is equipped with a smoke alarm to detect unsafe levels of smoke inside. Proper ventilation is essential before, during, and after cooking. Use the roof vent, entrance door, rear door, or windows to maintain safe air circulation.

- **Location:** Driver's side, above the rear TV, next to the bathroom.

OPERATION ON ALKALINE SMOKE ALARMS

- The alarm automatically activates when first mounted to its bracket.
- Powered by a 9-volt alkaline battery; will not operate without a battery.
- Replace the battery immediately if the low battery signal sounds.
- Upon detecting smoke, the alarm emits a loud, continuous sound using the internationally recognized evacuation horn pattern: three short beeps followed by a two-second pause, repeating until the air is cleared.

CAUTION

Mute Feature: *Before using the mute feature, identify the source of smoke and confirm that conditions are safe. Never ignore smoke or fire hazards.*

FALSE ALARMS FEATURE: MUTE

- Some smoke alarms feature a mute function to temporarily silence nuisance alarms.

TESTING THE SMOKE ALARM

- Press and hold the test button until the alarm sounds, then release.
- The alarm should sound for up to 10 seconds after release.
- Weekly testing is recommended to ensure the alarm, circuitry, horn, and battery are functioning properly.

WARNING

Testing Frequency: *Test the smoke alarm after vehicle storage, before each trip, and at least once per week during use. The alarm has a permanent marking located approximately 24 inches (610 mm) from the smoke alarm for reference.*

DANGER

Open Flame: *Never use an open flame to test the alarm. It could damage the unit or start a fire.*

BATTERY REPLACEMENT

- Powered by a 9-volt battery, designed to last at least one year under normal conditions.
- **Low battery indicator:** emits a beep every 30–40 seconds for at least 7 days.
- Replace with an alkaline battery such as Eveready Energizer #522 or Duracell #MN1604.

IN CASE OF SMOKE ALARM ACTIVATION

1. Immediately open doors, windows, and roof vents to ventilate the area and silence the alarm.
2. Identify and eliminate the source of smoke.
3. The alarm emits a repeating pattern: three beeps, pause, three beeps, with a flashing red LED. This ensures even sleeping occupants are alerted.

NOTICE

Remote Locations: *When traveling in remote areas, emergency services may be far away. Stay vigilant and prepared at all times.*

INFO

Refer to Component Manufacturer Resources: *For detailed instructions, operation, maintenance, and safety precautions for the smoke alarm, please refer to the documentation provided in the component's warranty package or consult the manufacturer's official website.*

SMOKE ALARM MAINTENANCE

It is essential to minimize the risk of fire and establish a fire escape plan that everyone is familiar with and has practiced.

WARNING

Location Awareness: *It is crucial to know your location when a fire accident happens so that emergency responders can find you. Always be aware of your surroundings.*

WARNING

Smoke Alarm Emergency Steps: *If the smoke alarm activates, immediately follow these steps:*
- Don't panic; stay calm.
- Exit the RV as quickly as possible. Do not stop to get dressed or collect belongings.
- Cover your nose and mouth with a cloth (preferably damp). Take short, shallow breaths.
- Meet outside at a safe distance from the RV and perform a head count.
- Call the fire department from outside. Provide your name and location
- Do not re-enter the RV until firefighters declare it safe.

WARNING

Alarm Sounds: *Ensure that all travelers in the RV know what each type of alarm indicates and what actions to take when they hear it.*

DANGER

Do Not Fight a Fire: *A fire extinguisher is not a substitute for the fire department. Never attempt to fight a fire—evacuate immediately.*

MAINTENANCE ROUTINE

- **Monthly:** Test the smoke alarm by pressing and holding the test button for at least 5 seconds until the beeps sound
- **Every 6 Months:** Vacuum dust off the smoke alarm to reduce false alarms and ensure smoke can reach the sensor.
- **Every 12 Months:** Replace the alkaline batteries.

CAUTION

Gas and Mechanical Systems: *Gas cylinders, pipes, fittings, and connections should be inspected regularly, especially after traveling on rough roads, as vibrations may loosen connections.*

CAUTION

Vehicle Systems and Appliances: *Maintain the RV's radiator hoses, fuel lines, brake systems, transmission, and other mechanical components in good condition to minimize the risk of leaks or malfunctions. Check all electrical appliances for frayed cords or visible damage.*

INFO

Alarm Reference: *Refer to the Smoke & Fire Alarm Manual provided in the RV information kit for additional details on alarm operation, maintenance, and safety features.*

SLIDING DOOR

ELECTRICAL OPERATION

If your vehicle is fitted with electrical closing assist, you will require less force to close the sliding door.

You can open and close the sliding door with the following control elements:

- Sliding door button on the center console
- Sliding door button on the door sill (B-pillar)
- Door handle (inside or outside)
- Key

If the electric sliding door is obstructed while opening, it moves a few centimetres in the opposide direction and stops.

If the sliding door is obstructed while closing, it opens fully again. If the electric motor of the sliding door is in danger of overheating, due to frequent opening and closing within a short period of time, the sliding door opens fully. The sliding door is then locked in place. The sliding door is operational again after approximately 30 seconds

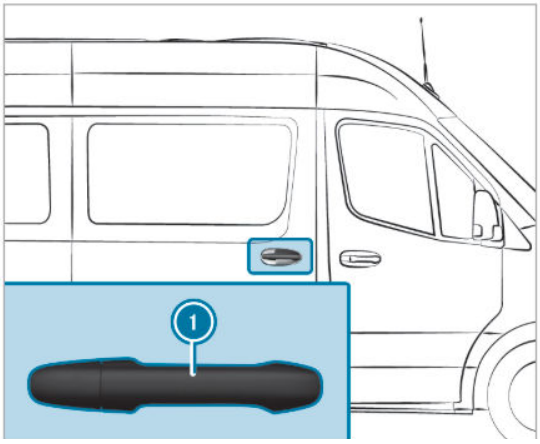

WARNING

Risk of Injury from Sliding Door Movement: *Risk of becoming trapped due to sliding door opening towards the rear. When you open the sliding door, it could hit other people as it moves towards the rear of the vehicle. Only open the sliding door when traffic conditions permit.*

WARNING

Risk of Injury Despite Object Detection Function: *The object detection function does not react to soft, light, or thin objects such as fingers. This function cannot prevent someone from becoming trapped in these situations.*
- When opening or closing the electric sliding door, make sure that no parts of the body are within the operating range of the door.
- If someone becomes trapped, press the button again to stop the sliding door.

NOTICE

Risk of Injury Despite Object Detection Function: *The object detection function does not react to soft, light, or thin objects such as fingers. This function cannot prevent someone from becoming trapped in these situations.*
- When opening or closing the electric sliding door, make sure that no parts of the body are within the operating range of the door.
- If someone becomes trapped, press the button again to stop the sliding door.

MANUAL OVERRIDE IN CASE OF POWER LOSS

In the event of a complete power failure or malfunction of the electric sliding door system, manual operation is still possible and allows continued access to the vehicle. This feature is especially important in emergency situations or if the battery becomes discharged and the door no longer responds to electronic commands.

Manual override ensures that the sliding door remains fully functional even when vehicle power is not available. This backup method provides continued usability and peace of mind in a variety of conditions, from electrical system faults to drained batteries. Always return to normal powered operation once the issue is resolved and battery power is restored.

ELECTRICAL SLIDING DOOR CLOSING ASSIST

The system includes two electric closing assist mechanisms, which provide powered movement during the final stage of closing. This feature assists in easier and smoother door operation by reducing the force required to close or open the door.

The door can be operated using:

- A sliding door button on the center console
- A sliding door button on the door sill (B-pillar)

NOTICE

Power Supply Requirement: *The sliding door's electric assist function operates only when the vehicle battery has sufficient charge. A weak battery may limit or disable door functionality.*

NOTICE

Cold Weather Operation: *In freezing conditions, door movement may be slower or temporarily hindered. Ensure the door tracks and seals are free of ice or debris.*

NOTICE

Obstruction Reversal Behavior: *If the electric sliding door encounters an obstruction during opening, it will reverse direction by a few centimeters and then stop to prevent damage or injury.*

CAUTION

Do Not Force Door: *Do not attempt to manually force the door open or closed while the electric motor is operating. Doing so may damage the mechanism or misalign the door.*

CAUTION

Use Only When Stationary: *Operate the electric sliding door only when the vehicle is fully stopped. Using the system while the vehicle is moving may result in system damage or door malfunction.*

DANGER

Keep Clear During Operation: *Keep all hands, arms, and objects clear of the door path while it is opening or closing. Serious injury or damage could occur if anything becomes trapped.*

INDICATOR LIGHTS IN BUTTONS

The sliding door control buttons are equipped with indicator lights that help you quickly understand the current position of the door. These indicator lamps provide a visual confirmation of door status during operation.

- When the sliding door is fully opened, the indicator light in the button will remain steadily illuminated to confirm the open position.
- When the sliding door is completely closed, the indicator light will turn off, signaling that the door is fully shut and latched.
- If the door is in motion or partially open, the indicator lamp will flash, indicating that the door is not yet in a fully open or closed position.

CENTER CONSOLE

DOOR SILL (B-PILLAR)

INFO

Refer to Sprinter Manual: *For detailed operating instructions on electrical sliding door, please refer to the Mercedes-Benz Sprinter Operator's Manual.*

REAR SCREEN SYSTEM

MANUAL OPERATION

The Vacanza is equipped with a manual rear fabric screen and privacy system designed to keep insects out ventilation, visibility and full rear privacy when the rear doors are open. The system consists of a flexible fabric assembly that covers the entire rear opening of the vehicle.

USING THE REAR SCREEN

Ventilation/Screen Mode (Mesh Panel)

1. Release the retaining straps neat the ceiling.
2. Lower the screen assembly toward the floor.
3. Align the screen with the rear opening.
4. Secure the left and right side zippers to the vehicle frame.
5. Close the center zipper as needed.

CAUTION

Zippers and Fabric Care: *Do not force the zippers or pull the fabric sideways, as this may cause tearing, zipper damage, or misalignment.*

CAUTION

Cleanliness: *Ensure the fabric and zippers are free of dirt, sand, or debris. Contaminants may cause premature wear or zipper binding.*

WARNING

Not a Safety Barrier: *The rear screen is not designed to support weight or restrain occupants. Do not lean against, sit on, or place heavy objects against the screen.*

DANGER

Entanglement Hazard: *Keep hands, fingers, clothing, and loose items clear of the zippers and retaining straps during operation. Improper handling may result in injury.*

Privacy Mode (Solid Fabric Panel)

1. Lower the solid fabric panel fully from the stored position.
2. Ensure the panel covers the entire rear opening.
3. Secure the side zippers to the rear door frame.
4. Close the center zipper as needed.

NOTICE

Fully Deployed: *When fully deployed, the solid panel blocks visibility from both inside and outside the vehicle, providing privacy for sleeping or interior use.*

To Open and Store the Rear Screen System

1. Fully unzip the center and side zippers.
2. Roll the screen assembly upward toward the ceiling.

NOTICE

Securing Screen: *Secure the rolled screen using the provided retaining straps and buckles to prevent movement during travel.*

SIDE SCREEN SYSTEM

MANUAL OPERATION

The Vacanza is equipped with a manually operated side screen system installed at the side door opening. This mesh screen provides ventilation while helping prevent insects from entering the interior living space.

The screen extends from ceiling to floor and forms a full-height barrier when deployed. It is operated manually and secured using an integrated vertical zipper.

OPERATION

Deploying the Screen

1. Pull the screen downward into position across the side door opening.
2. Align the edges properly along the frame.
3. Close the vertical zipper completely to seal the opening.

Access Through the Screen

1. Use the zipper opening for entry or exit.
2. Always close the zipper fully for insect protection.

Storing the Screen:

1. Fully unzip the screen.
2. Roll the screen upward toward the ceiling.
3. Secure it using the provided retaining straps or fasteners before driving.

NOTICE

Ventilation: *When fully deployed and zipped closed, the screen allows airflow while reducing insect entry.*

CAUTION

Zipper Operation: *Operate the zipper slowly and evenly. Do not force the zipper if resistance is encountered.*

WARNING

Travel Position: *Ensure the screen is fully rolled up and secured before operating the vehicle. Driving with the screen deployed may result in damage to the mesh or mounting components.*

USB PORTS

Your vehicle is equipped with multiple dual USB charging ports, each combining a Type-A port and a Type-C port, thoughtfully positioned throughout the interior to provide convenient access to power no matter where you are seated

These ports allow you to charge a wide range of USB-powered devices, including smartphones, tablets, e-readers, portable battery packs, and other everyday electronics.

Each dual USB outlet is integrated into the vehicle's electrical system and delivers regulated output to ensure consistent and stable charging. Even when multiple devices are connected simultaneously, the system helps maintain optimal performance without significant power drop.

Because the USB ports are built directly into the vehicle's power system, no additional adapters or converters are required for standard USB charging.

NOTICE

Charging Limitations: *Some high-power devices such as laptops may require a dedicated outlet or inverter. USB ports are intended for charging low to medium-power electronics.*

CAUTION

Avoid Overuse: *While multiple ports can be used at the same time, avoid overloading the electrical system with too many high-draw devices at once. Doing so may lead to slower charging or tripped circuits.* **Do not leave devices unattended while charging.**

WARNING

Heat Buildup: *Prolonged charging of multiple devices simultaneously may generate heat near the ports. Always allow for proper ventilation and unplug devices if ports or cables feel excessively warm.*

DANGER

Electrical Shock Risk: *Do not attempt to modify, disassemble, or tamper with the USB ports or their wiring. Doing so may result in electric shock, fire, or damage to the vehicle's electrical system.*

110V/120V POWER OUTLETS

It is equipped with standard 110V/120V power outlets, similar to household wall outlets.

Each outlet includes two integrated USB charging ports: one USB Type-C (3A) and one USB Type-A (2.4A). These outlets allow you to power or charge AC devices such as laptops and small appliances while simultaneously charging USB-powered electronics. Power is supplied either through the vehicle's inverter when using house batteries or directly from shore power when connected.

NOTICE

Power Capacity Limits: *The total available power from the AC outlets depends on the inverter's rating and battery charge. High-wattage appliances may not operate correctly unless the vehicle is connected to shore power. USB ports are intended for low- to medium-power device charging only.*

CAUTION

Appliance and USB Device Selection: *Avoid connecting high-draw AC appliances such as space heaters or hair dryers, and do not overload USB ports with multiple high-current devices simultaneously. Overloading may trip breakers, slow charging, or damage the inverter.*

WARNING

Moisture and Shock Hazard: *Do not use AC outlets or USB ports near sinks, showers, or wet areas. Contact with moisture can cause electric shock, short circuits, or fire.*

DANGER

Fire and Severe Electrical Shock Risk: *Never attempt to modify, bypass, or tamper with the outlets, integrated USB ports, or wiring. Misuse may result in fire, severe electrical shock, or permanent damage to the vehicle's electrical system.*

SEATS

The seating configuration and operation vary depending on the vehicle's floor plan.

All seats are equipped with integrated seatbelts and must be used whenever the vehicle is in motion. Once aligned, the seat will lock into place. Vacanza models feature two main seats in the front area: the driver and passenger (pilot and co-pilot) seats which are mounted on swivel bases.

NOTICE

No Swivel While Driving: *Swivel operation for pilot co pilot seats should only be performed while the vehicle is stationary. Always ensure the seat is securely locked before driving.*

NOTICE

Clear Area Before Rotation: *Make sure the surrounding area is clear before rotating the seat.*

CAUTION

Lock Seat Before Travel: *Always return seats to the forward-facing, locked position before driving.*

SWIVEL SEAT OPERATION

The driver and front passenger seats are equipped with swivel mechanisms that allow manual rotation when the vehicle is parked.

To Rotate the Seat:

1. Ensure the vehicle is completely stationary and the parking brake is engaged.

2. Slide the seat slightly rearward to provide clearance from the steering wheel or door frame.

3. Pull the swivel release lever, located below the seat base.

4. While holding the lever, manually rotate the seat toward the desired direction.

5. Release the lever once aligned. The seat will lock into place.

INFO

Refer to Sprinter Manual: *For detailed instructions on the operation and adjustment of the OEM seats, please refer to the Mercedes-Benz Sprinter Operator's Manual.*

SEATBELTS

Seatbelts are among the most critical safety systems in your vehicle. In the event of a collision or sudden stop, a properly worn seatbelt can greatly reduce the risk of injury by keeping you securely positioned in your seat.

Modern seatbelt systems are equipped with pre-tensioners, which automatically tighten the belt during a crash, reducing slack and helping to distribute force evenly across key areas of the body such as the shoulders, chest, and pelvis.

According to safety studies, correctly worn seatbelts can reduce the risk of fatal injury by up to 47% and the chance of serious injury by 52%.

HOW TO WEAR YOUR SEATBELT CORRECTLY

- **Snug Fit:** Make sure the seatbelt lies snugly across your shoulder and pelvis—not your stomach—to maximize protection.
- **Flat and Straight:** The belt should lie flat without any twists. A twisted belt can reduce its ability to absorb impact forces and may cause injury.
- **Proper Routing:** The shoulder strap must always go over the collarbone and shoulder—not under the arm or behind the back. Misuse increases the chance of injury in a crash.

Taking a moment to ensure your seatbelt is properly positioned every time you drive is one of the simplest and most effective ways to protect yourself and your passengers.

INFO

Refer to Sprinter Manual: *For detailed instructions on the proper use, adjustment, and safety features of the OEM seatbelts, please refer to the Mercedes-Benz Sprinter Operator's Manual.*

NOTICE

Proper Storage When Not in Use: *Allow seatbelts to fully retract when not in use to prevent wear or obstruction in the retraction system.*

NOTICE

Inspect Regularly: *Check for fraying, damage, or excessive wear. If the seatbelt does not retract smoothly or the latch doesn't engage securely, have it inspected by a qualified technician.*

CAUTION

After-Collision Inspection: *Seatbelt systems may need to be replaced after any moderate to severe impact, even if no visible damage is present. Always have the system inspected by a qualified service technician after an accident.*

WARNING

Do Not Modify: *Never modify or tamper with any seatbelt component, including webbing, buckles, or pre-tensioners. Alterations can reduce performance and may void safety certifications*

DANGER

Misuse Can Be Fatal: *Wearing a seatbelt incorrectly—such as placing the shoulder strap behind your back or under your arm—greatly increases the risk of serious or fatal injury in an accident. Always wear seatbelts as instructed.*

SEAT AND SEAT BELT SAFETY

To ensure both safety and comfort while driving, it is essential to properly adjust your seat and seat belt. A well-positioned seat and correctly worn seat belt provide the best possible protection in the event of a collision. Follow these guidelines:

1. Backrest Positioning – Maintain Upright Posture: Adjust the backrest to an almost vertical position. Avoid reclining the seat too far back, as this reduces the seat belt's effectiveness and increases injury risk in the event of a crash.

2. Arm Position – Maintain Comfortable Reach: When holding the steering wheel, your arms should be slightly bent. This improves control and reduces fatigue, especially during long trips.

3. Seat Belt Routing – Correct Belt Placement: Ensure the seat belt fits snugly:

- The shoulder belt should pass over the middle of your shoulder and lie flat against your chest.
- The lap belt should be positioned low, across the hips—not the abdomen.

This routing helps reduce the risk of injury during sudden braking or a collision.

4. Head Restraint – Align at Eye Level: Adjust the head restraint so the top aligns with the back of your head, ideally at eye level. This minimizes the chance of whiplash injuries in rear-end collisions.

5. Seat Position – Proper Leg Extension: Your seat should allow full depression of the pedals with your legs slightly bent. This position ensures quick, effective pedal control without strain.

NOTICE

Adjust Seat Before Driving: *Adjust the seat properly before beginning your journey. Always ensure the backrest is in an almost vertical position and that the shoulder section of your seat belt is routed across the center of your shoulder.*

WARNING

No Adjustments While Driving: *You could lose control of your vehicle if you do the following while driving: adjust the driver's seat, head restraint, steering wheel, or mirrors, or fasten the seat belt. Always complete these adjustments before starting the engine.*

WARNING

Risk of Trapping During Seat Adjustment: *When adjusting a seat, you or other occupants could become trapped (e.g., fingers or limbs caught in the seat rails).*
Always ensure the area around the seat is clear before making adjustments.

WARNING

Reclined Backrest Reduces Belt Effectiveness: *The seat belt will not offer full protection if the backrest is reclined too far. In a collision or sudden braking, you could slide beneath the belt, risking serious injury to the abdomen or neck.*

HEAD RESTS

To ensure optimal safety, always adjust the head rest so it sits as close as possible to the back of your head. This adjustment is essential for reducing the risk of whiplash, a neck injury commonly caused by rear-end collisions. Head rests are engineered to limit excessive backward motion of the head and neck, significantly lowering the chance of serious injury during an accident.

Always use the integrated button to move the head rest up or down. Each head rest is designed specifically for its seat position, so avoid interchanging them—doing so can affect both the height and angle adjustment capabilities and compromise protection.

NOTICE

Safety Awareness: *Head restraints are a critical safety feature—not just a comfort accessory. Always remind passengers of their importance before traveling.*

NOTICE

Passenger Awareness: *Ensure all passengers understand the purpose and proper adjustment of head rests to enhance overall cabin safety.*

NOTICE

Head Restraint Positioning: *Always drive with the head restraints installed. Before driving off, make sure for every vehicle occupant that the center of the head restraint supports the back of the head at about eye level.*

CAUTION

Improper Adjustment Increases Injury Risk: *An improperly positioned head restraint may not protect effectively during a crash, increasing the risk of neck or spinal injuries.*

CAUTION

Incorrect Position Reduces Protection: *Always keep head rests in their original seating position. Switching them between seats can compromise fit and effectiveness in the event of a collision.*

CAUTION

Damaged Head Rests May Fail in Impact: *Check your head rests regularly for damage or looseness. A worn or broken head rest may not offer protection when needed most.*

WARNING

Improper Head Restraint Use: *If head restraints are not installed or positioned correctly, they cannot provide intended protection.*
This increases the risk of head or neck injuries during accidents or sudden stops.

WARNING

Avoid Modifications: *Do not remove, modify, or tamper with the head rests. Alterations can reduce their ability to minimize injury during an accident.*

WARNING

Adjust for Height: *Always ensure the head rest aligns with the back of your head, approximately at eye level. Misalignment can increase the chance of whiplash or serious head and neck injuries during a crash.*

INFO

Refer to Sprinter Manual: *For detailed instructions on the manual operation and adjustment of the OEM headrests, please refer to the Mercedes-Benz Sprinter Operator's Manual.*

REAR SEATS / SOFA BED

Vacanza Tour models feature a three-passenger power sofa bed at the rear of the vehicle. A removable and retractable table must be taken out and stored before converting the sofa into a bed.

OPERATING THE REAR SEATS/ SOFA BED

Rear seating components are fully motorized and controlled exclusively through the Garmin Control System touchscreen located inside the vehicle.

1. Access the Garmin Control System

- Tap the "Home" screen to access furniture controls.

2. Select the Command

- **EXT (Extend):** Moves the seat cushion outward to expand the surface.
- **RET (Retract):** Returns the seat cushion to its upright seating position.
- **DOWN:** Lowers the cushion for setup or access.
- **UP:** Raises the cushion to seating height.

3. Select the Area to Adjust:

- **D/S Ottoman:** Controls the driver-side ottoman.
- **P/S Ottoman:** Controls the passenger-side ottoman
- **Rear Sofa:** Controls the main 3 passenger sofa bed.

NOTICE

Fully Motorized Control: *No manual adjustment is needed. All movements are powered and controlled from the Garmin interface.*

CAUTION

Keep Clear During Operation: *Do not place items or body parts in the movement path of the sofa or ottomans. Motorized movement may result in damage or injury.*

CAUTION

Motor Overheating: *Avoid operating the bed system repeatedly within a short period to prevent motor overheating. Allow sufficient cooling time between adjustments.*

WARNING

Do Not Adjust While Driving: *Never operate the sofa bed or ottomans while the vehicle is in motion. Always ensure that all rear seats are in a secure upright position before driving.*

WARNING

Clear Seats Before Adjustment: *Please make sure there is no objects or passengers on the seats to avoid injuries. Do not leave food or beverages on the seats to avoid spillages.*

WARNING

Occupancy During Operation: *Never occupy or place heavy items on the seats while adjusting the bed position. Serious injury or equipment damage may occur.*

DANGER

Children's Safety: *Keep children away from the Garmin furniture controls. Misuse could result in injury due to sudden or unexpected seat movement.*

INFO

Garmin Control System Reference: *For detailed information on operating rear beds, ottomans, and other seat-related functions, refer to the Garmin Control System Screens section in this Owner's Manual.*

REAR SEATS / SOFA BED LAYOUT

The images highlight the layout and positioning of the three-passenger rear sofa and dual ottomans, showing how the space can be used for both seating and sleeping arrangements.

These photos provide a visual reference of the interior layout, demonstrating the versatility of the rear living space.

- Shows the **modular layout**, with ottomans and sofa positioned for maximum usability.
- Comfortable **seating arrangements** for dining, lounging, or socializing.
- Practical **sleeping setup** when the sofa is fully extended.

SYNTHETIC LEATHER FABRIC CARE

The seating surfaces in your vehicle are made of a high-quality synthetic leather. This material features a polyurethane surface backed by rayon, providing a leather-like feel while being durable and easy to maintain. It is also PVC-free.

CLEANING INSTRUCTIONS

- **Basic Cleaning:** Wipe the surface with a soft cloth and a mild soap-and-water solution for regular care.
- **Spot Treatment:** For small stains, apply a mixture of water and gentle detergent to the affected area.
- **Stubborn Stains:** For tougher spots, a water-based multipurpose cleaner or degreaser may be used. Avoid solvents.

NOTICE

Avoid Solvent-Based Products: *Do not use cleaners containing acetone, nail polish remover, or aromatic solvents, as they may permanently damage the surface.*

WARNING

Risk of Heat Damage: *Do not use high heat to dry the synthetic leather surfaces. Excessive temperature can cause damage, warping, or discoloration.*

Type of Stain	Detergent/Water	Cleaner/Degreaser
Coffee / Tea	●	
Red Wine	●	
Cola / Soft Drinks	●	
Milk	●	
Ketchup	●	
Steak / Soy Sauce	●	
Mayo / Butter	●	●
Salad Oil	●	●
Chocolate	●	●
Cosmetic Makeup	●	●
Lipstick	●	●
Face Cream	●	●
Suntan Oil / Lotion	●	●
Shoe Polish	●	●
Urine	●	●
Machine Oil	●	●

ARMRESTS

The armrests in your vehicle are designed to improve comfort and provide additional support during travel. Adjusting them properly can help reduce fatigue and maintain good posture over long distances.

OPERATION

1. Raised Position:

- Lift the armrest upward to its maximum vertical position
- This is the "out-of-use" or folded position and provides additional space for entry or exit.

2. Lowered Position:

- Pull the armrest down gently until it stops at the fixed position for normal use.
- There are no intermediate angle adjustments.

NOTICE

Armrest Types: *The driver and front passenger seats are equipped with OEM Mercedes-Benz armrests, integrated into the seat design. The rear seat armrests on Lounge seats are Grech-installed components and differ in construction and operation from the front OEM armrests.*

CAUTION

Avoid Forcing the Armrest*: Do not force the armrest beyond its mechanical limits, as this may damage the internal pivot or support mechanism.*

WARNING

Secure Position Before Driving: *Ensure the armrest is either fully lowered or securely folded before driving. A loose armrest may shift unexpectedly and interfere with driver control or passenger stability.*

DANGER

Child Safety Risk: *Do not allow children to hang or pull on the armrests. Sudden movement or failure of the support mechanism may cause injury.*

TABLES

REAR REMOVABLE TABLE

Vacanzas are equipped with a rear removable table system designed for multi-purpose use. Each table includes a detachable leg and a 360° swivel function, allowing flexible positioning for dining, working, or leisure activities. The tabletop is mounted to a fixed bracket located on the ottoman on the passenger side.

When not in use, the table components should be properly stored inside the wardrobe closet and secured using dedicated brackets that prevent shifting during travel.

NOTICE

Proper Alignment: *Make sure the table leg is correctly seated and the magnet engaged before locking. The table can be rotated and repositioned to accomodate diferent seating arrangements.*

NOTICE

Swivel Function: *Rotate the tabletop slowly to prevent contact with nearby surfaces.*

WARNING

Secure Before Travel: *Make sure that the table is installed in the correct way. An unsecured table can become a projectile hazard in the event of sudden stops or sharp turns. Designed for light to moderate use only. Do not overload.*

WARNING

Loose Objects: *Do not leave loose items, food, or beverages on the table while driving. These may fall or spill due to vehicle motion, potentially causing injury or damage.*

DANGER

Pinch Hazard: *Keep hands and fingers clear of bracket areas when installing or removing the table leg. Sudden movement or improper handling can cause injury.*

REAR REMOVABLE TABLE OPERATION

The rear removable table is designed for a quick installation, adjustment, and storage when not in use. It features an integrated tabletop and leg assembly that mounts directly onto a bracket located on the passenger side ottoman.

MAGNETIC CONNECTION AND LOCKING LEVER

A magnetic connection and locking lever help secure the table in position during use. The table is equipped with a 360° swivel mechanism, allowing it to rotate freely.

INSTALLING AND USING THE TABLE

1. Remove the table from the designated storage area in the closet.
2. Fully unfold the table legs into the use position.
3. Align the table mounting plate with the bracket located on the passenger-side ottoman.
4. Insert the table into the bracket until the magnetic connection engages.
5. Use the locking lever to secure the table in place.
6. Adjust the table position as needed using the swivel and sliding mechanisms.

STORING THE REAR REMOVABLE TABLE

When the table is not in use, it must be folded and stored properly to prevent movement or damage while driving.

1. Fold the table legs completely into the storage position.
2. Move the table to the designated storage space inside the unit closet.
3. Insert the table following the shape of the storage compartment, with the folded legs facing inward toward the closet.
4. Ensure the table sits fully inside the storage area.
5. Locate the locking tab positioned on the upper left side of the storage space.
6. Rotate the lock into the vertical position, perpendicular to the floor, to secure the table and prevent movement.

REMOVING THE TABLE FROM STORAGE

1. Locate the locking tab on the upper left side of the table.
2. Rotate the locking tab back to its horizontal position.
3. Once released, the stopper will allow the table to slide out.
4. Carefully remove the table from the storage compartment.
5. Unfold the table legs fully before installing the table for use.

NOTICE

Designated Area: *Always store the table only in the designated closet storage area.*

CAUTION

Locking Tab: *Ensure the locking tab is fully engaged before driving. Do not force the table into or out of the storage compartment.*

GALLEY FOLDING TABLE

Vacanza Tour models include a folding table located behind the copilot's passenger seat, positioned as an extension of the kitchen galley area. The table is equipped with a hinge system featuring a locking lever on each side to hold it in the open position during use. When no longer needed, the table folds down against the wall to conserve interior space.

This table provides a functional surface for tasks such as food preparation, eating, or other stationary activities.

COMPACT FOLDING TABLE

Vacanza Tour models also include a compact folding table located behind the driver's seat, using the same hinge and latch system as the main folding table. It is positioned for convenient access when the driver's seat is rotated. This table provides a stable surface for tasks such as dining, working, or holding personal items

CAUTION

Do Not Overload: *Avoid placing heavy or unbalanced items on the tables to prevent stress on the hinges or accidental tipping.*

CAUTION

Weight Limit: *Do not place heavy appliances or objects on the folding tables. Excessive weight may damage the hinges or mounting structure.*

WARNING

Secure Table Before Driving: *Always fold and latch tables before driving. Failure to do so could result in movement during transit, posing a safety hazard.*

WARNING

Avoid Loose Objects: *Do not leave loose items or open containers on the tables while the vehicle is in motion. Sudden stops or vibrations may cause items to fall or spill, creating a risk of injury or damage.*

WARNING

Movement Hazard: *Ensure tables are folded and latched securely before moving the vehicle. Unsecured tables can shift and cause injury during travel.*

NOTICE

Locking Mechanism: *Levers on both hinges must be fully engaged for the tables to remain open and stable during use.*

CAUTION

Cleaning and Maintenance: *Clean the tables' surfaces with a mild cleaner. Avoid abrasive pads or solvents that could damage the finish or hinge mechanism.*

DANGER

Pinch Risk: *Keep hands, clothing, and electrical cords clear of the folding hinges during setup and stowing.* **Improper handling may result in serious injury.**

DANGER

Child Safety: *Do not allow children to operate or climb on the table. It is not designed to support body weight and may collapse or cause injury.*

TELEVISION

A VIZIO® VHD24M-0810 24" HD LED television is installed in Vacanza Tour models to provide onboard entertainment. The television is located in the rear area of the vehicle, allowing viewing while seated on the sofa bed or while using the rear lounge area.

Audio output is provided through a separate sound bar connected to the television, offering improved sound quality compared to the television's internal speakers. Audio settings can be adjusted using the television remote control or the sound bar controls, depending on configuration.

OPERATION

- Use the television remote control to power the unit on or off and adjust picture settings.
- Select the appropriate input source based on the connected device or content source.
- Adjust volume using the television or sound bar controls.

NOTICE

Power Consumption: *The television and sound bar operate using the vehicle's electrical system. Extended use without shore power or adequate battery charge may reduce available house battery capacity.*

CAUTION

Screen and Equipment Care: *Do not apply pressure to the television screen. Clean the display using a soft, dry microfiber cloth only. Do not spray liquids directly onto the screen or audio components.*

CAUTION

Electrical Load: *Extended television use may increase battery consumption when the vehicle is not connected to shore power or when charging systems are inactive.*

CAUTION

Power Sources: *Use only the designated outlets for powering television components. Do not plug additional high-load devices into the same circuit.*

WARNING

TV Operation While Driving: *If the television is in use while the vehicle is in motion, all passengers must remain properly seated with seatbelts fastened at all times.*

DANGER

Securing Equipment: *Ensure that the television is securely mounted or stored before driving. Unsecured devices can become hazardous during sudden movement or collisions.*

INFO

Refer to Manufacturer's Manual: *For detailed instructions on operation, settings, troubleshooting, and care of the television and sound bar, please refer to the manufacturer's user manuals provided with the vehicle or consult the respective manufacturer's official documentation.*

MEDIA DEVICE PRE-INSTALLATION SETUP

Vacanza models include a factory-installed media pre-installation setup designed to support the installation of a customer-supplied streaming media device behind the Timberline display panel.

This setup provides:

- A dedicated 120V power outlet
- An HDMI cable connection for audio and video signal transmission to the television

The access panel for this media setup is located inside the upper cabinet on the driver's side, positioned beside the bathroom area.

ACCESSING THE MEDIA SETUP

To access the pre-installation area:

1. Open the upper cabinet on the driver's side.
2. Locate the protective cover panel behind the Timberline display area.
3. Carefully remove the four mounting screws securing the cover.
4. Gently remove the panel to expose the media wiring connections.
5. Reinstall the panel securely after completing installation.

CONNECTION OVERVIEW

The following components are provided for media device installation:

HDMI Cable:

- Used to connect the streaming device to the television for audio and video transmission.

120V Power Outlet:

- Used to power the streaming device using its manufacturer-supplied power adapter.

Power Supply Cable

- Provides available power within the compartment for compatible configurations.

Other wiring visible in the compartment are part of the vehicle's control system and is not related to the television system.

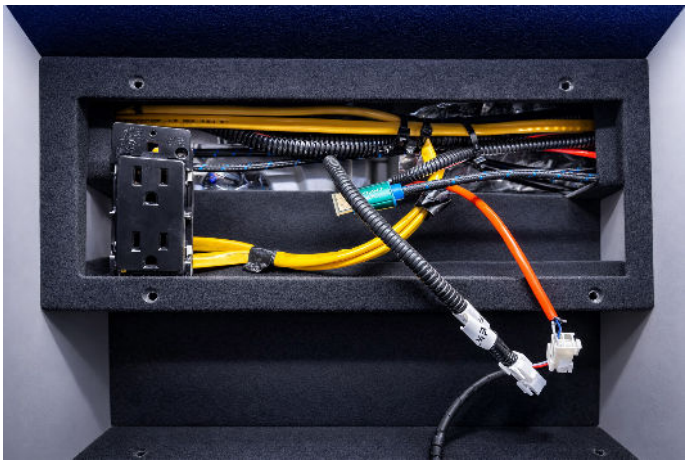

NOTICE

Additional Wires: *Other wiring visible in the compartment is part of the vehicle's control system and is not related to the television system.*

NOTICE

Device Compatibility: *The pre-installation setup supports standard HDMI-based streaming media devices.*

CAUTION

Do Not Modify Wiring: *Do not alter, splice, or disconnect any existing vehicle wiring harnesses within the compartment. Unauthorized modifications may cause system malfunction or damage.*

CAUTION

Electrical Safety: *Disconnect shore power and turn off the inverter before accessing internal wiring connections.*

WARNING

Secure Equipment Before Traveling: *Any installed media device must be properly secured before operating the vehicle. Loose equipment may shift during transit and cause damage.*

INFO

Refer to Manufacturer's Manual: *For detailed instructions on installation, configuration, troubleshooting, and operation of any third-party streaming device installed in this setup, please refer to the device manufacturer's official documentation.*

REFRIGERATOR

A NovaKool RFU7100DC 12V refrigerator is installed in Vacanza Tour units. It is a tall, slim compressor refrigerator-freezer unit with a 6.8 cu ft (192 L) total capacity, including a 1.7 cu ft (48 L) freezer drawer. It runs entirely on 12 V DC power with built-in low-voltage battery protection and efficient compressor operation.

OPERATION AND TEMPERATURE CONTROL

- To start, power on the unit and set the thermostat between positions 3 and 4. Allow adequate time to cool before loading food; setting it to a colder setting will not accelerate cooldown speed.
- Turn the thermostat clockwise for colder, counter clockwise toward "0" to turn unit off, with a click and past-click action denoting OFF position.

NOTICE

Initial Cool-Down: *Allow the unit several hours to reach optimal temperature before loading with food. Turning the dial to a higher number during start-up does not accelerate cooling.*

SPECIFICATIONS AND FEATURES

- **Compressor System:** Single compressor system, preset for efficiency and quiet performance
- **Latch System:** Positive latch system to secure the door while underway
- **Shelving:** Powder-coated zinc wire shelves, including tall-bottle storage
- **Door Panels:** Replaceable, stainless steel door panels
- **Seals and Insulation:** Magnetic gaskets, CFC-free urethane foam insulation, stainless fasteners and hinges
- **Low- Battery Protection:** Low-voltage cut-out protection, preventing battery over-discharge

NOTICE

Door Seal Closure: *Make sure the refrigerator door and seal are fully closed to maintain proper cooling performance. A partially open or misaligned door can cause temperature fluctuations, condensation, or excessive frost buildup.*

INFO

Refer to Manufacturer's Manual: *For detailed operating instructions, temperature control settings, maintenance, and safety guidelines for the refrigerator, please refer to the documentation provided in the warranty package or consult the manufacturer's official website.*

REFRIGERATOR'S MAINTENANCE

To ensure proper operation and extend the lifespan of these Nova Kool refrigerators, it is important to follow the recommended procedures for manual defrosting, cleaning, sanitizing, and maintaining adequate ventilation.

DEFROST AND CLEANING

These Nova Kool refrigerators use a static cooling system and require manual defrosting. When frost buildup exceeds 1/4 inch (6 mm), follow these steps:

- Turn the thermostat knob fully counterclockwise to the OFF position.
- Remove all food and place towels below the freezer area to catch meltwater.
- Leave the door open to let the frost melt naturally. Do not use sharp tools or heat sources.
- Once defrosted, clean with mild soap and warm water. Dry completely before turning the unit back on.

Defrosting may be needed every few weeks, depending on usage and humidity.

SANITIZING AND VENTILATION

Clean the interior regularly with a soft cloth and a mild soap solution. For deeper cleaning or odor control, use a mix of baking soda and water (1 tablespoon per quart/liter). Wipe door seals and shelves often to prevent mold.

Leave space between items inside the fridge for proper airflow. Keep rear ventilation areas clear and dust-free to ensure cooling efficiency.

For storage, always turn the unit off, defrost, clean, and leave the door slightly open to prevent odors and mold buildup.

NOTICE

Level Surface Required: *Ensure the RV is completely level before operating. Off-level positioning can damage internal systems or reduce cooling efficiency.*

NOTICE

Clean After Defrost: *Always clean interiors with non-abrasive agents like diluted baking soda. Abrasive pads can damage surfaces.*

CAUTION

Low Voltage Shutdown: *The unit will shut off at ~10.6 V and restart at ~11.7 V to protect the RV's battery bank.*

CAUTION

Adequate Ventilation Required: *Insufficient airflow to condenser can result in poor performance and premature wear.*

WARNING

Ventilation Critical: *Never block airflow through the condenser vents. Insufficient ventilation may cause overheating and waste cooling performance. Insufficient airflow to condenser can result in poor performance and premature wear.*

DANGER

Risk of Refrigerant Leak: *Aggressive scraping or puncturing the evaporator may cause refrigerant leaks and system failure.*

DANGER

High Voltage Hazard: *Do not attempt internal repairs or power modifications. For servicing, consult a qualified technician to avoid electric shock or compressor damage.*

ELECTRIC INDUCTION COOKTOP

The *Vacanza Tour model* is equipped with a Duxtop® Portable Induction Cooktop, model 9600LS / BT-200DZ. This single-burner induction cooktop operates on 120V AC power and delivers up to 1800 watts of cooking power using induction technology. Induction cooking heats compatible cookware directly through a magnetic field, providing fast response, precise control, and improved safety by keeping the glass surface cooler than traditional electric cooktops.

This cooktop is designed for use in recreational vehicle environments and is intended for household cooking purposes only.

SAFETY FEATURES

The cooktop includes multiple built-in safety protections:

- **Pan Detection System:** The cooktop will not operate unless compatible cookware is detected. An error code will display if cookware is unsuitable or removed.
- **Automatic Shut-Off:** The unit shuts down automatically after 120 minutes of inactivity or when the timer expires.
- **Overheat Protection:** If cookware temperature exceeds safe limits, the unit will reduce output or shut down automatically.
- **Cooling Fan Protection:** The internal fan continues to operate after shutdown until safe operating temperature is reached.
- **Control Lock Function:** Prevents accidental changes to settings during operation.
- **High-Temperature Indicator:** "HOT" remains displayed after use until the surface cools.

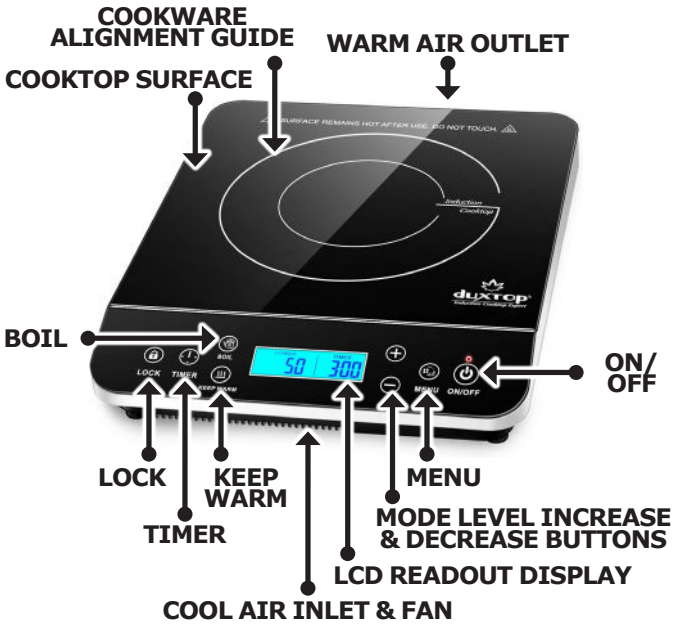

IMPORTANT SAFETY INFORMATION

Read all instructions before operating the cooktop.

NOTICE

Household Use Only: *This appliance is intended for household use only. It is not designed for commercial or industrial use.*

CAUTION

Hot Surfaces: *The cookware and cooktop surface may remain hot for several minutes after use. Avoid contact to prevent burns.*

CAUTION

Medical Devices: *This cooktop emits an electromagnetic field. Individuals with pacemakers or similar medical devices should consult a physician before use.*

WARNING

Electric Shock and Fire Hazard: *Do not submerge the cooktop or power cord in liquid. Do not operate the unit with wet hands or in wet environments. Never use the cooktop if the glass surface, power cord, or plug is damaged.*

WARNING

Fire Hazard: *Do not operate the cooktop near flammable or explosive materials. Do not place paper, towels, or combustible materials on or near the cooktop while it is operating or still hot.*

DANGER

Improper Use: *Do not attempt to disassemble or repair the cooktop. Service and repairs must be performed by qualified personnel only.*

OPERATING INSTRUCTIONS

CAUTION

Electrical Load: *Always use a dedicated 120V / 15-amp outlet. Do not share the circuit with other high-draw appliances.*

1. Place cooktop on a dry, stable, non metallic, heat resistant surface.

2. Maintain at least 4 inches of clearance on all sides for ventilation.

3. Plug the power cord into a 120V/15 amp electrical socket. The unit will beep and the power indicator will illuminate red.

4. Place compatible cookware with ingredients on the center of the cooktop.

5. Once the cooktop is plugged in, press ON/OFF. The LCD display will activate and the cooling fan will start. By pressing the MENU button, the cooktop will activate at the default power setting of 5.0.

6. After cooking is completed, press the "ON/OFF" button to turn off the unit. The LCD screen will turn off, however "HOT" will display and the cool air fan will continue to run until unit is cooled.

NOTICE

Preaheating Pan: *To briefly preheat a pan, please use a low heat setting while supervising. An empty pan could heat much faster than expected.*

PRESET FUNCTIONS

- **LOCK:** Locks all controls except ON/OFF. It is a convenience and safety feature. Designed to keep the cooking and timer settings from being accidentally changed once they have been set.

- **BOIL:** When pressing this button the unit will switch to power mode level 10 and the timer will automatically set to 10 minutes. When timer has expired, the unit will beep and the cooktop will turn off.

NOTICE

Restarting Boiling Function: *If the volume of water has not reached a full boil, please restart the boil function.*

- **KEEP WARM:** If you press the keep warm button, the unit will switch to temperature mode at 140 degrees F with the timer set for 30 minutes.

COOKWARE REQUIREMENTS

The induction cooktop will only operate with compatible cookware.

NOTICE

Cookware Compatibility: *If a magnet sticks firmly to the bottom of the cookware, it is suitable for induction cooking.*

Cookware must:

- **Be made of ferrous magnetic material.** If the cookware bottom is made of material with low ferrous magnetic content the "POT" error code may display, indicating cookware is not suited for induction cooking.

- **Have a flat bottom surface with a minimum diameter of 5 inches.** Diamater and thickness of the cookware's magnetic layer needs to be large enough to catch the magnetic wave, otherwise the cooktop may not operate ("POT" error code).

Suitable Cookware Materials:

- Iron
- Cast iron
- Enameled iron
- Magnetic stainless steel
- Stainless steel manufactured with a magnetic bottom

DO NOT Use:

- Glass
- Copper
- Ceramic
- Aluminum
- Non-magnetic stainless steel (18/10, 18/8) bottom

POWER MODE AND TEMPERATURE MODE

This unit offers both Power and Temperature Modes for convenient and efficient cooking along with an automatic 10-hour timer. Power and Temperature Modes functions work indepndently of each other.

Power Mode: The power level selected directly relates to the amount of wattage, or the BTU/HR equivalent, the cooktop generates. To increase the cooking speed, select a higher power level.

- Default setting: 5.0
- Adjustable from 0.5 to 10
- Higher levels increase cooking speed

Temperature Mode: Temperature Mode should be used when a specific cooking temperature is required. Once the cookware has reached the selected temperature, the unit will cycle to maintain the selected cooking temperature.

- This mode has 20 temperature settings ranging from 100°F to 460°F.
- Default setting: 300°F
- Recommended for frying or browning foods

NOTICE

Temperature Accuracy: *Displayed temperatures are estimates. Actual cookware temperature may vary depending on cookware material and thickness.*

NOTICE

Switching bewtween Power Mode and Temperature Mode: *By pressing the Menu button you may switch modes. If a specific cooking temperature is not required, it is suggested to use power mode.*

NOTICE

For frying or browning food: *Temperature mode is preferred because the built-in microprocessor monitors and regulates the cookware. Frying or browning food under Power Mode may overheat the cookware, and in some cases, extremely high temperatures may damage your cookware or cooktop.*

CAUTION

Limitaitions of Temperature Mode: *Temperature sensor on this glass cooktop is located underneath the glass top. As a result of that, and that different cookware yields different temperatures, the temperature readout is only an estimate of the actual cooking temperature. It is accurate enough for daily cooking requirements.*

The temperature in your pan may be different than the setting you have selected. *Please test a few times to find proper temperature setting for your particular cooking task and cookware.*

INFO

Refer to Manufacturer's Manual: *For detailed operating instructions, safety precautions, troubleshooting, and maintenance information for the Duxtop® Portable Induction Cooktop (Model 9600LS / BT-200DZ), refer to the manufacturer's user manual provided with the vehicle or consult the manufacturer's official documentation.*

10-HOUR AUTOMATIC TIMER

The cooktop includes an automatic timer usable in both modes.

- Press the "Timer" button to activate the timer. The timer portion of the LCD display will activate and 0:00 will appear in the LCD Readout Display.
- The :00 minutes portion of the readout will be blinking, indicating the minutes can be set.
- Press the + or - key to set the number of hours.
- 5 seconds after you have set the hours portion of the timer, the numbers will stop blinking and timing will start.
- If you do not enter an amount of time into the Automatic Timer within 10 seconds the feature will shut off and the timer will not be set.

NOTICE

Increasing and Decreasing: *The + and - buttons can be tapped to increase or derease the minutes/hours by 1 minute/1 hour increments or they can be held down for rapid increase or decrease of time, as necessary.*

NOTICE

Resetting Timer: *The timer may be reset at any time during operation by pressing the timer button again. When the timer has expired, the unit will beep and the cooktop will turn off.*

NOTICE

Automatic Shutdown: *The cooktop unit will shut down automatically in 120 minutes if no button or key is pressed. This is a feature in compliance with safety regulations.*
The cooktop unit will automatically shut off and beep after 1 minute, if either:
- The wrong type of cookware is put on the cooktop
- No cookware is placed on the unit (POT will flash on the LCD screen)
- The unit is turned on and the menu button is not pressed

CARE AND MAINTENANCE

Clean the cooktop after it has completely cooled. Use a moist cloth with a mild liquid detergent to wipe off grease and stains, and ley dry. Protect the cooktop from dust by covering it when not in use.

DO NOT:

- Use metal scouring pads, solvents or abrasive cleaners
- Immerse the unit or cord in water or other liquids
- Clean while plugged in
- Keep the unit plugged in when not in suse
- Store or clean the unit while still hot
- Place objects heavier than 25 lbs on the surface
- Use the unit of the cooktop surface or power cord is damaged
- Keep the cooktop unit on or near other heat sources

MICROWAVE OVEN

The RV200S-CON Contoure microwave is installed in all Vacanza models. It operates on 120V AC power and functions as a microwave, convection oven, and air fryer.

This appliance can be powered by:

- Shore Power Connection
- 3,000-watt Inverter System

NOTICE

Power Supply Requirements: *Before use, confirm that the microwave is connected to a reliable 120V AC source. If the unit does not turn on, check the circuit breakers and ensure the inverter is enabled or that shore power is properly connected.*

PRODUCT OVERVIEW AND SPECIFICATIONS

- **Model:** RV200S-CON
- **Capacity:** 1.1 cu ft interior
- **Cooking Power:** 1,000 W (microwave) / 1,500 W (convection)
- **Power Requirements:** 120 V AC, 12.5 A
- **Controls:** Electronic touchpad with LED display and preset cooking modes.

MODES OF OPERATION

This unit supports microwave and convection air-fry modes for a variety of cooking tasks, from reheating and defrosting to baking and crisping.

1. Microwave Mode:

- Use for standard microwave cooking, reheating, and defrosting.
- When operating at settings below 100% power, the magnetron will cycle to maintain the set power level—a normal behavior.

2. Convection / Air Fryer Mode:

- Uses "Smart Air Fry" and convection heating to bake, roast, crisp, and brown food like a conventional oven.
- Requires trays and cookware that permit proper airflow.

CONTROLS AND SETTINGS

Easy-to-use touchpad controls include preset menus, adjustable power levels, and express cooking options for quick operation.

- Features nine one-touch cooking menus and ten adjustable power levels including time, weight, and auto defrost functions.
- Includes express cook and custom programming options.

INFO

Refer to Microwave Owner's Manual: *For detailed operating instructions, power settings, maintenance, and safety guidelines for the microwave, please refer to the documentation provided in the warranty package or consult the manufacturer's official website.*

PROPER USE AND OPERATION

To ensure safe and effective performance, the microwave must always be operated with the turntable in place and food properly loaded. This section outlines key usage guidelines for microwave, convection, and air-fry modes.

Turntable use:

- Always operate the microwave with the turntable and support in place.
- Do not invert, remove, or obstruct the turntable, as this may cause uneven cooking or damage.

CAUTION

Improper Turntable Use: *Running the microwave without the turntable properly positioned may lead to uneven cooking or mechanical damage.*

1. Turntable Rotation:

- The turntable may rotate in either direction. This is normal and helps ensure even heating.

2. Food Placement:

- Always place food or a microwave-safe container inside before starting the oven.
- Operating the microwave while empty may damage internal components.

CAUTION

Fire Hazard: *Do not overcook food. Always monitor the unit when using paper, plastic, or other combustible materials inside the oven.*

WARNING

Do Not Operate Empty: *Running the microwave with no contents can cause internal component damage and increase fire risk.*

WARNING

If Flames Appear Inside the Oven: *Keep the door closed. Turn the unit off. Disconnect from power or disable the inverter system at the control panel.*

3. Convection and Air Frying:

- The oven includes a convection fan and air-fry function. Use only cookware and trays approved for convection use, and allow proper airflow.

TURNTABLE AND LOADING GUIDELINES

The turntable ensures even heating and must be used correctly at all times. Improper use—such as running the oven empty or removing the turntable—can cause damage and affect cooking performance.

- Includes a 12.5″ glass turntable. It must remain in place and correctly seated during operation—never invert or remove it.
- Turntable may rotate clockwise or counterclockwise to distribute heat evenly.
- Always load food or a container before starting the oven; running empty may damage the magnetron.

CLEANING AND MAINTENANCE

Regular cleaning preserves performance and safety. Follow these basic maintenance steps to keep the interior, exterior, and door seals in good condition while avoiding damage to electrical components.

- Disconnect power before cleaning.
- Use a soft cloth and mild detergent for both interior and exterior surfaces.
- Do not immerse the appliance or use abrasive cleaners
- Regularly inspect and clean door seals.

CAUTION

Electrical Hazard: *Always disconnect shore power or turn off the inverter before cleaning to avoid risk of shock.*

CAUTION

Unsafe Storage: *Do not use the microwave interior for storage. Items left inside may ignite during use.*

WARNING

Radiation Exposure: *Never operate the unit with the door open. This can result in harmful microwave exposure.*

WARNING

Do Not Use If Damaged: *Do not use the microwave if the door, hinges, seals, or latches are damaged or misaligned.*

WARNING

Do Not Attempt Repairs: *Do not modify or attempt to repair the microwave door or internal components. Servicing must be done by qualified personnel.*

KITCHEN FAUCET

The kitchen faucet in RV's features a functional, modern design with a brushed satin nickel finish and a pull-down handle. This configuration offers ease of use for rinsing, filling, and cleaning tasks in the galley area.

FEATURES AND DESIGN

This section describes the key design elements and functional features of the kitchen faucet, highlighting its durable finish and user-friendly controls that enhance everyday use and cleaning efficiency.

1. Brushed Satin Nickel Finish:

- Designed for durability, the satin nickel finish resists fingerprints and water spots, helping maintain a clean appearance with minimal maintenance.

2. Pull-Down Handle:

- The integrated pull-down handle allows precise control of the spray direction, making everyday tasks more efficient.

3. Toggle Function:

- A built-in toggle switch lets you switch between spray patterns to suit different needs—from gentle rinsing to high-pressure cleaning.

CARE AND MAINTENANCE

Proper care is essential to maintain appearance and function over time.

1. Regular Cleaning:

- Use a soft cloth with mild soap and water to clean the faucet. This helps remove smudges and maintains the finish.

2. Spot Cleaning:

- For mineral buildup, use a solution of equal parts white vinegar and water. Apply with a soft cloth, rinse thoroughly, and dry.

CAUTION

Avoid Harsh Cleaners: *Do not use abrasive sponges, scouring pads, or harsh chemicals. These may scratch or damage the finish, reducing the faucet's longevity.*

3. Regular Inspections:

- Check periodically for leaks, loose fittings, or reduced flow. Prompt attention to wear or buildup can help prevent larger maintenance issues.

CAUTION

Water Pressure and Use: *Do not force the handle or hose extension beyond its intended range. Misuse can damage internal components and lead to leaks.*

NOTICE

Water Supply Compatibility: *This faucet is designed for use with potable cold and hot water systems only. Do not connect to unregulated, untreated, or high-pressure water sources.*

CAUTION

Hose Retraction: *Always guide the pull-down hose back into position gently. Allowing it to snap back may damage internal components or reduce retraction performance.*

INFO

Refer to Kitchen Faucet Owner's Manual: *For detailed operating instructions, cleaning, maintenance, and safety guidelines for the kitchen faucet, please refer to the documentation provided in the warranty package or consult the manufacturer's official website.*

CABINETS

Cabinets in *Vacanza models* are made of high-pressure laminated Birch hardwood. This material is selected for its strength and ability to withstand daily use during travel without excessive wear.

Upper cabinets include a push-lock mechanism to keep the doors securely closed while the vehicle is moving. This helps prevent cabinet doors from opening unexpectedly, especially on uneven roads.

To Open a Cabinet:

- Press the center of the push-lock button to release the latch.
- The button will pop out, indicating the lock is disengaged.
- Pull the handle or door edge to open the cabinet.

To Close and Lock a Cabinet:

- Gently push the cabinet door until it is fully closed.
- Press the push-lock button again until it clicks inward.
- Confirm the door is securely latched by lightly pulling on it — it should not open.

NOTICE

Travel Safety: *Always verify that all cabinet doors are fully closed and locked before driving. This prevents items from falling and helps avoid interior damage during travel.*

NOTICE

Ventilation Considerations: *Do not store damp or sealed items that may trap moisture. Poor ventilation inside cabinets can lead to mold or damage to wood surfaces*

NOTICE

Organizational Accessories: *Using shelf liners, bins, or dividers can help keep items stable during travel and reduce movement.*

CAUTION

Weight Capacity: *Avoid overloading the cabinets. Excess weight may cause damage to the hinges or cabinet structure over time.*

CAUTION

Avoid Excessive Force: *Do not force the cabinet doors open or closed. The push-lock system is designed to operate with minimal pressure.*

WARNING

Secure Cabinets Before Travel: *Make sure all cabinet doors are properly closed and locked before driving. Unsecured cabinets may open during motion, causing contents to fall.*

WARNING

Water Storage: *Store a 5-gallon bucket of water in dry, hot weather climates to have a reserve available for use while traveling.*

DANGER

Hot Contents Hazard: *Do not store recently used cookware or appliances that may still be hot. High temperatures in enclosed cabinets may present a fire or burn risk.*

TOILET SYSTEM

This RV's toilet features a single foot-pedal flush mechanism that enables hands-free operation. Pressing the pedal halfway allows the bowl to fill with water; a full press opens the blade valve and flushes waste into the black holding tank. After each flush, a small amount of water remains in the bowl to act as a seal and prevent odors.

This model is the Thetford Aqua-Magic® Style Plus, which combines durability, ease of use, and simple maintenance.

The system operates from your RV's fresh water supply and does not include a separate internal tank. It is critical to use only RV-safe toilet paper and Thetford-approved sanitation chemicals for proper waste breakdown and seal protection. The integrity of the blade seal and water connections directly affects performance and reliability.

NOTICE

Proper Maintenance: *Routine inspection and cleaning of the toilet and surrounding area will help extend component life and improve odor control.*

CAUTION

Check for Leaks: *Inspect the base of the toilet and water supply line before use. Leaks may result in water damage.*

CAUTION

Flush-Only Approved Materials: *Only flush human waste and RV-safe toilet paper. Do not flush wipes, paper towels, or hygiene products.*

CAUTION

Avoid Non-Silicone Lubricants: *Do not use petroleum-based spray lubricants on toilet seals or mechanisms.*

WATER FILL AND FLUSH OPERATION

The RV toilet uses a pedal-operated flushing mechanism that provides two-step functionality for proper operation and hygiene:

- **Half Pedal Press (Water Fill):** Lightly pressing the flush pedal halfway opens the water valve without engaging the blade valve. This fills the toilet bowl with water before use. Adding water before use helps with waste breakdown and improves flushing performance.
- **Full Pedal Press (Flush):** Pressing the pedal all the way down and hold for 2-3 seconds to ensure a complete flush. It will open the blade valve and simultaneously release water, flushing the contents into the black tank.
- **Auto Refill:** After each full flush, the system automatically refills the bowl with a small amount of water. This standing water acts as a barrier to block odors from the black tank.

CAUTION

Prevent Splashing and Seal Wear: *Do not release the pedal abruptly during flushing. Let the blade valve close smoothly to prevent water splashback and premature wear of the blade seal..*

TO FLUSH WATER:

Press all the way.

TO ADD WATER:

Press halfway.

TROUBLESHOOTING

This section outlines common issues that may occur with the RV toilet system and provides step-by-step solutions for inspection and repair.

Addressing these problems promptly helps maintain system functionality and prevents water damage or sanitation failures.

1. Leaks

- **Back of Toilet:** Inspect the water supply line at the inlet valve. If leaking, tighten the fitting. If the valve body itself leaks, replacement may be necessary.
- **Vacuum Breaker During Flush:** If water leaks from the vacuum breaker when flushing, the vacuum breaker or water module should be replaced.

2. Toilet Won't Hold Water

- Check for debris along the blade seal track and remove any obstructions.
- Verify the blade valve compresses properly when closed.
- If the seal is visibly worn, cracked, or no longer flexible, replace it.

3. Pedal is Harder than Normal

- Apply a light film of silicone-based toilet seal conditioner to the blade or ball seal area. This will improve pedal operation and reduce friction.

NOTICE

Approved Lubricants Only: *To avoid damage, do not use petroleum-based spray lubricants. Use only silicone-based toilet lubricants.*

4. Poor Flush Performance

- Confirm that the foot pedal is fully depressed for a complete flush (lasting 2–3 seconds).
- Disconnect the water supply line and check the water flow. The minimum required flow rate is 10 quarts (9.5 liters) per minute to achieve proper flush pressure.

USAGE GUIDELINES

RV toilets function differently than household models and require special considerations for use and maintenance.

1. Approved Waste Only

- Flush only human waste and RV-rated toilet paper.
- Do not dispose of wipes (even those labeled as flushable), feminine hygiene products, diapers, or paper towels in the toilet. These materials do not break down effectively and can clog the sewer line.

2. Using RV Specific Toilet Paper

- Always use toilet paper labeled as safe for RV use. This paper dissolves rapidly and minimizes the risk of blockage in the tank or piping.

3. Water Level Maintenance

- After each flush, a small amount of water should remain in the bowl to form a seal against odors.
- If the water level is consistently low or does not return after flushing, inspect the fill mechanism for obstructions or leaks.

4. Cleaning and Preventantive Maintenance

- Use non-abrasive, RV-safe cleaning products to clean the bowl and pedal mechanism.
- Avoid harsh chemicals that may damage seals or valves.
- Clean with a soft cloth or sponge. Avoid bleach, scouring powders, or acidic cleaners.
- Regularly apply silicone-based toilet seal conditioner to preserve blade flexibility and seal integrity.

5. Monitor Holding Tank Levels

- Use the RV's control system to monitor the black tank level. Do not allow the black tank to overfill.
- Empty the tank regularly at authorized dump stations to avoid waste buildup, sensor malfunctions, or odor issues.

6. Seal Maintenance

- Treat the blade seal twice annually; replace every 4–6 years depending on usage.

7. Winterization

- Drain bowl and water line before using RV-grade antifreeze; open valve while applying air pressure to clear pipes

INFO

Refer to Manufacturer's Manual: *For detailed operating instructions, flushing procedures, maintenance, and safety guidelines for the toilet, please refer to the documentation provided in the warranty package or consult the manufacturer's official website.*

SPRAY NOZZLE

The bathroom sink in your *Vacanza models* is equipped with a dual-function spray nozzle that operates as both a standard faucet and a handheld shower head. This configuration offers enhanced utility within the compact space of the RV bathroom.

SYSTEM DESCRIPTION

The water nozzle is integrated into the sink faucet. When extended, it functions as a handheld shower and can be mounted on the wall hook located at a higher position in the bathroom for overhead use.

MODES OF OPERATION

- **Faucet Mode:** Operates like a standard sink faucet, suitable for washing hands, brushing teeth, or filling the basin.
- **Shower Mode:** The nozzle can be pulled out and used as a handheld shower for rinsing or hygiene purposes. It can also be secured to the wall hook for use as an overhead shower
- **Temperature Control:** The faucet provides manual control of hot and cold water to adjust the desired temperature for both faucet and shower use.

NOTICE

Proper Closure: *To prevent residual dripping, ensure the nozzle is fully shut off after switching from handheld shower mode back to faucet mode.*

NOTICE

Shower Drying: *Allow the shower compartment to dry completely after use. Run the fan to remove moisture. This will help prevent mold and mildew.*

CAUTION

Secure After Use: *Always return the handheld spray nozzle to its base. Leaving it unsecured may result in it falling and causing damage.*

CAUTION

Do Not Overextend: *Avoid pulling the hose or faucet assembly with excessive force, as this may damage the internal connections or reduce system longevity.*

WARNING

Slip Hazard: *Water may accumulate on the bathroom floor during handheld or overhead use. Always use caution to avoid slips or falls.*

INFO

Refer to Manufacturer's Manual: *For detailed operating instructions, use as a faucet and handheld shower, maintenance, and safety guidelines for the spray nozzle, please refer to the documentation provided in the warranty package or consult the manufacturer's official website.*

VACANZA 24 170 EXT RV UPPER VIEW DIAGRAM

This section provides a general overview of the components located on the upper exterior of the RV. These features support ventilation, communication, energy generation, and odor control functions.

1. ROOF AIR VENT: Roof-mounted ventilation vent with a manually operated opening mechanism. Designed to improve airflow and interior ventilation by allowinpero g heat, moisture, and odors to exhaust through the roof opening.

2. STARLINK ANTENNA: Factory-installed Starlink pre-installation setup consisting of factory installed wiring, mounting brackets, and roof hardware to support future customer installation of a Starlink antenna. Internet service and antenna hardware are not included. System operation requires customer-supplied equipment and an active Starlink subscription.

3. MAIN AIR CONDITIONING UNIT: Roof-mounted air conditioner that provides climate control for the RV interior. It operates using the vehicle's power system.

4. HOLDING TANK VENT CAPS: Roof-mounted vent caps connected to the RV's black and gray water tanks. These vents expel odors to the outside, preventing them from entering the living area.

5. BATHROOM ROOF VENT FAN: Compact exhaust fan with push-button operation and locking lid. Designed for ventilating moisture and odors from the bathroom and shower area.

6. SOLAR CABLE ENTRY MODULE: Roof-mounted sealed cable entry housing that routes wiring from the solar panels into the interior electrical system. This component is factory-sealed to prevent water intrusion and protects the solar wiring connections from environmental exposure. This is not a user-accessible outlet and does not require owner operation.

7. SOLAR PANELS: Three roof-mounted solar panels. These panels support passive battery charging, helping to extend off-grid operation by maintaining energy levels without relying solely on shore power or alternator charging.

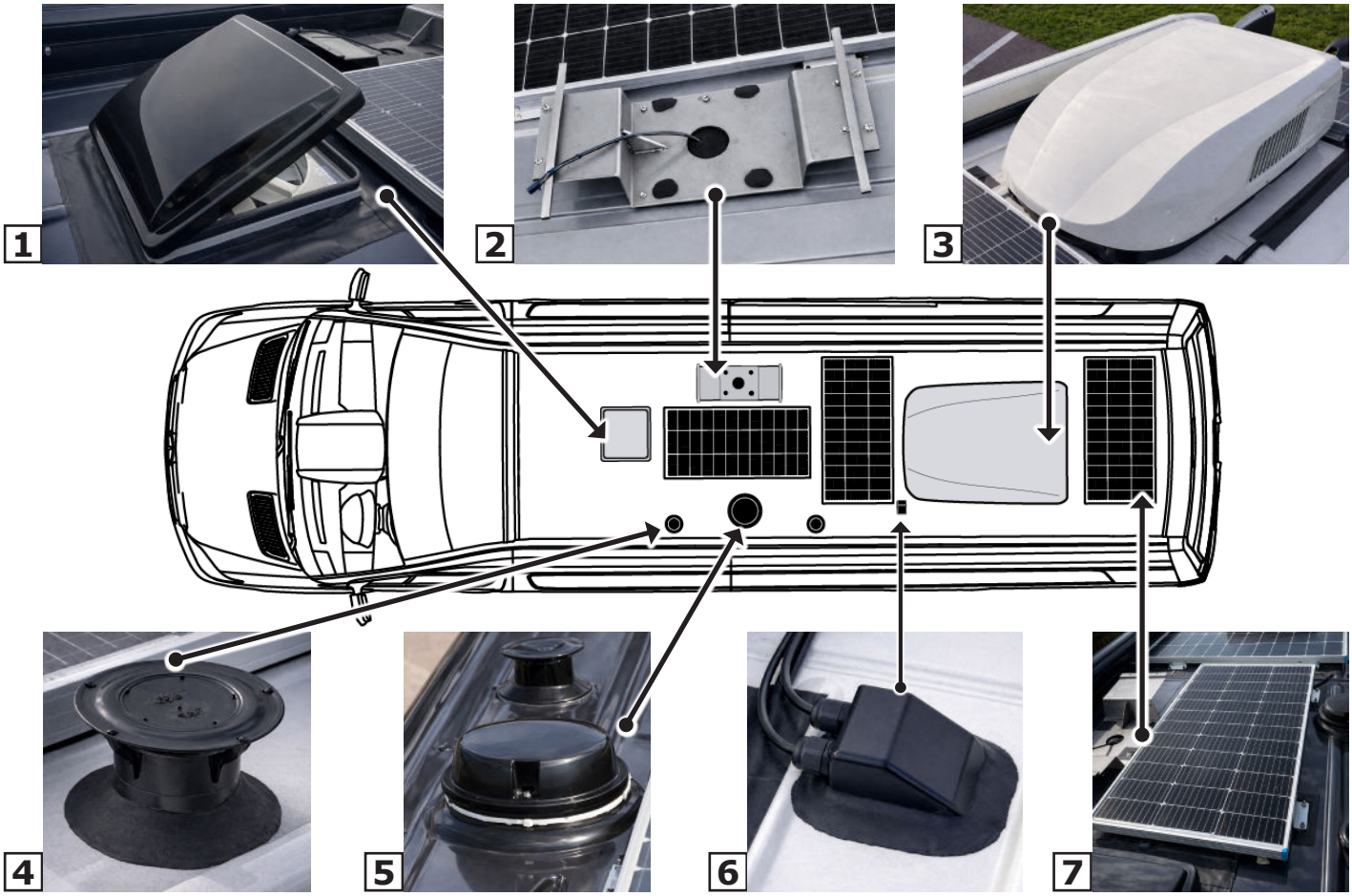

ROOF AIR VENT

The Vacanza is equipped with a roof-mounted MaxxFan® ventilation system designed to improve interior airflow by exhausting heat, moisture, and odors from the living area.

This system is intended to support natural ventilation and air movement and does not provide heating or air conditioning.

The vent lid is manually operated using an interior control knob, allowing the opening to be adjusted as needed for ventilation.

The fan provides multiple speed settings controlled through an interior keypad and operates on the vehicle's 12V DC electrical system to circulate air inside the cabin. When the vent lid is closed while the fan is running, the system can function in ceiling fan mode to recirculate interior air.

The MaxxFan is designed to be fully open or fully closed when the vehicle is in motion.

NOTICE

Manual Vent Operation: *The roof vent lid is opened and closed manually using the interior control knob. Do not force the knob during operation; rotate gently to avoid damage.*

CAUTION

Cleaning and Care: *Clean all MaxxFan components using mild soap and water only. Do not use petroleum-based, solvent-based, or caustic cleaning products, as these may cause cracking or permanent damage to the fan housing and components.*

WARNING

Insect Screen: *Never operate the fan with the insect screen removed. Doing so may result in injury or damage to the fan.*

WARNING

Vehicle Movement: *Ensure the vent lid is fully open or fully closed before driving. Operating the vehicle with the vent partially open may result in damage to the vent assembly.*

MANUAL VENT LID OPERATION

The vent lid can be opened or closed manually using the control knob located on the fan housing.

To operate the vent lid manually:

- Pull the knob downward to unlock it before turning.
- Rotate the knob counterclockwise to open the vent lid.
- Rotate the knob clockwise to close the vent lid.
- Push "IN" to lock when vent lid is open or closed.

CAUTION

Rotating and Locking: *Do not use excessive force when turning or locking the knob. If resistance is felt, slightly rotate the knob to align it properly before locking.*

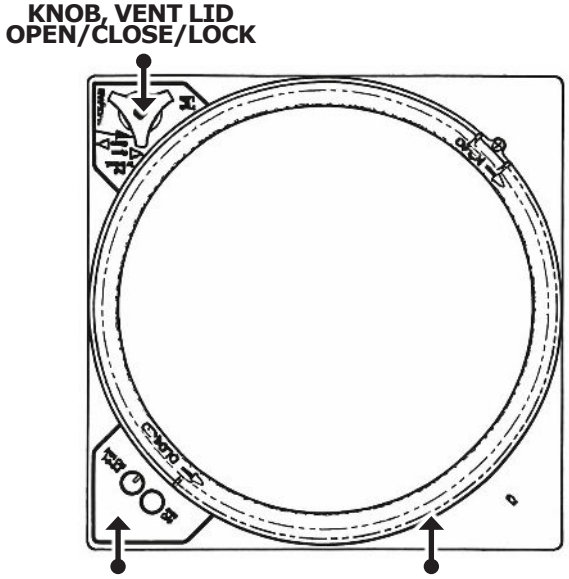

NOTICE

Serial Number Label: *The serial number label is located underneath the round insect screen. The Maxxfan is designed to be fully closed when the vehicle is moving.*

CEILING FAN MODE

Ceiling fan mode is achieved by closing the vent lid while the fan motor is running. In this mode, the fan circulates interior air only, which can help improve comfort without introducing outside air.

NOTICE

Proper Vent Lid Position: *For proper operation and safety, ensure the vent lid position matches the intended ventilation mode.*

KEYPAD CONTROLS

The fan motor is controlled using the interior keypad and operates on 12V DC power supplied by the vehicle.

CAUTION

Rotating and Locking: *When removing insect screen for cleaning, turn the maxxfan off and remove the vehicle 12 volt power to the maxxfan. When cleaning your maxxffan, use only a mild detergent solution.*

Fan ON (1–2–3–4):

- Turns the fan motor ON to the last selected speed. When the fan is running, cycles through four (4) speeds, once high speed is reached, fan motor will cycle back to low speed.

Fan OFF:

- Turns the fan motor off at any selected speed.

When the fan is running and the vent lid is closed, the system can operate in ceiling fan mode, allowing air to circulate inside the RV without exchanging air through the roof opening.

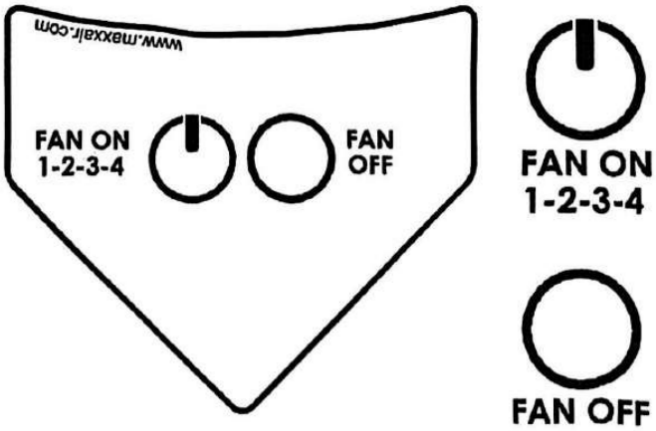

CAUTIONS AND CARE OF YOUR FAN

Proper cleaning of the fan is essential to prevent damage.

Clean all components using:

- Mild soap and water only

WARNING

Fan Operation While Driving: *Do NOT use petroleum-based products, solvent-based cleaners, or harsh chemicals.*

Non-Compatible Chemicals (Do Not Use):

- Ketones
- Esters
- Acetone or similar solvents
- Halogenated hydrocarbons
- Amines
- Aromatic hydrocarbons
- Certain thread-locking compounds (e.g., specific Loctite® formulas)
- Any product labeled as unsafe for use on plastics

Non-Compatible Chemicals (Do Not Use):

- Mild acids or alcohols
- Alkalis (avoid strong alkaline solutions
- Aliphatic hydrocarbons
- Mild soap solutions
- Silicone oils or greases without aromatic additives

CAUTION

Cleaning Product Labels: *Always review cleaning product labels before use. Improper cleaning agents may cause cracking, discoloration, or component failure.*

STARLINK PRE INSTALLATION SETUP

Vacanza ION models are equipped with the factory-installed wiring, mounting brackets, and roof hardware required for a customer-supplied Starlink antenna. The vehicle does not include a Starlink antenna or active equipment as part of the standard build.

This pre-installation setup provides a ready-to-use infrastructure that supports an easy antenna installation once the customer obtains their Starlink hardware and subscription.

SYSTEM OVERVIEW

The Starlink pre-installation includes:

- Roof-mounted bracket and pass-through hardware designed to support a standard Starlink dish.
- Pre-routed power and data cables from the roof bracket to an interior connection point.
- Dedicated mounting space for the user-provided Starlink router or power supply unit.

This setup ensures compatibility with the Starlink system but does not enable connectivity until the customer installs their own antenna and activates their subscription.

OPERATION AFTER CUSTOMER INSTALLATION

Once the customer installs the Starlink dish and activates service:

- The Starlink system will automatically align for optimal satellite reception.
- No manual positioning or adjustment is needed.
- Internet performance will depend on the Starlink service plan, installation accuracy, and environmental conditions.

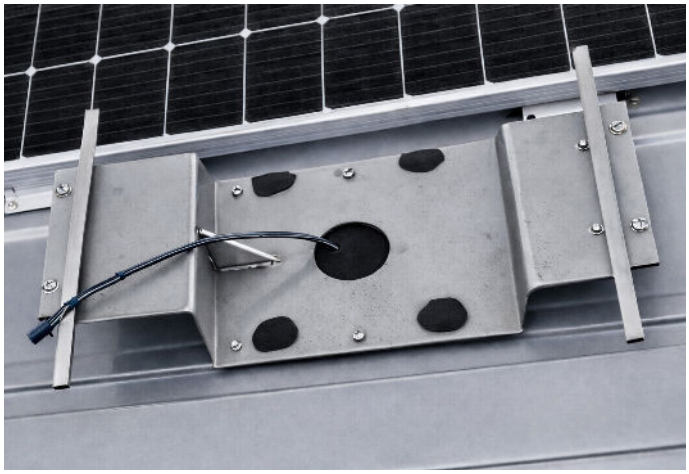

INFO

Refer to Manufacturer's Manual: *The antenna operates in various conditions, including rain, snow, and heat. Extreme obstructions, like heavy snow or thick foliage, may reduce signal strength.*

NOTICE

Fixed Mounting Point: *The roof-mounted bracket is permanently installed and protected. No user interaction is required for transport or storage until the customer installs their own Starlink antenna.*

NOTICE

Environmenntal Considerations: *The installation hardware is designed to remain outdoors year-round. While it is weather-resistant, environmental factors such as heavy snow accumulation or thick foliage may affect signal performance after the customer installs their Starlink antenna.*

CAUTION

Roof Access: *Do not climb onto the roof or attempt to modify, clean, or adjust the factory-installed mounting hardware. Any service or adjustments must be performed by authorized personnel to avoid damage to the vehicle or the Starlink system once installed.*

CONNECTING TO STARLINK WI-FI

This section applies after the customer installs and activates their own Starlink system using the pre-installed wiring and mounting hardware in the Vacanza ION.

1. From any device (smartphone, tablet, or laptop), open the Wi-Fi settings menu.

2. Select the Starlink network name (SSID). The default SSID may appear as "STARLINK," unless renamed by the user inside the Starlink app.

3. Enter the Wi-Fi password associated with customer's Starlink account.

4. Once connected, internet access will be available automatically when the Starlink system is online and has satellite connectivity.

NOTICE

Internet Availability: *Service availability may vary depending on geographic region and active Starlink coverage zones. For the most current information, refer to the official coverage map on starlink.com.*

CAUTION

Do Not Obstruct Antenna: *After installation, avoid covering, blocking, or placing objects near the Starlink antenna. Obstructions can significantly reduce satellite signal strength.*

WARNING

Service Activation Required: *Ensure your Starlink subscription is active and linked to your customer-owned hardware before travel. Without an active subscription, internet connectivity will not be available.*

CONNECTING TO STARLINK WI-FI

1. From any device (smartphone, tablet, or laptop), go to your Wi-Fi settings.

2. Select the Starlink network name (SSID), which may be labeled "STARLINK" or a custom name set by the user.

3. Enter the Wi-Fi password associated with your Starlink account.

4. Once connected, internet access should be available automatically if the system is online.

NOTICE

Internet Availability: *Service availability may vary depending on geographic region and active Starlink coverage zones. For the most current information, refer to the official coverage map on starlink.com.*

CAUTION

Do Not Obstruct Antenna: *After installation, avoid covering, blocking, or placing objects near the Starlink antenna. Obstructions can significantly reduce satellite signal strength.*

WARNING

Service Activation Required: *Ensure your Starlink subscription is active and linked to your customer-owned hardware before travel. Without an active subscription, internet connectivity will not be available.*

USING THE STARLINK APP

The Starlink app enables monitoring, adjustments, and system management after the customer installs their Starlink equipment.

1. Download the Starlink app from the Apple App Store or Google Play Store.

2. Log in using your Starlink account credentials.

3. The app allows the user to:

- View connection status and signal quality.
- Restart the system if needed.
- Check for obstructions or satellite visibility.
- Update firmware and manage Wi-Fi settings.

NOTICE

Account Management: *Starlink accounts, subscriptions, and billing are managed directly through the Starlink app or website. A valid and active service plan is required for system functionality.*

NOTICE

Starlink Setup Support: *If you require assistance with your Starlink setup, use the official Starlink support channels listed below.*

Methods to Contact Support:
-Starlink App: *Open the app, go to Support, and select Contact Support.*
- Starlink Website: *Log in at starlink.com, navigate to Support, and create a support ticket.*
- **Chatbot:** *Available in the app or on the Starlink website for automated assistance.*

ROOF AIR CONDITIONER

The roof-mounted Gree air conditioner is installed near the rear of the cabin ceiling and is responsible for cooling the interior of the RV. The system is controlled using the Garmin Control System, which provides access to climate functions through its touchscreen interface.

ROOF AIR CONDITIONER MODES

From the Garmin touchscreen, users can select Rear Climate Modes:

- **OFF** – Turns the system off
- **COOL** – Activates air conditioning
- **HEAT** – Engages heating mode
- **DRY** – Reduces humidity inside RV
- **FAN** – Circulates air without cooling or heating

Use the arrow buttons on the screen to adjust the temperature set point. The current set point is displayed numerically (e.g., 50°F) and can be raised or lowered to achieve the desired comfort.

Airflow direction can be adjusted via the ceiling vents; however, do not manually adjust the vents on the ends of the unit, as they operate using the swing control on the Garmin touchscreen.

NOTICE

Ceiling Vents: *Do not obstruct or cover the ceiling vents. Restricted airflow may impair cooling performance and can lead to system malfunction.*

CAUTION

Heat Pump Operation Limit: *The minimum temperature for heat pump operation is 40 °F (4 °C). Below this temperature, use the Timberline heater system instead to maintain cabin warmth and prevent inefficient or improper air conditioner operation.*

OPTIMIZING A/C PERFORMANCE

The effectiveness of the roof air conditioner depends on surrounding conditions. The following steps help reduce heat gain and improve cooling efficiency:

- **Park in Shade:** Whenever possible, park in shaded areas to limit solar heating.
- **Close Window Shades:** Use blinds or reflective covers to block sunlight.
- **Minimize Openings:** Keep windows and doors closed to maintain cool air.
- **Reduce Internal Heat:** Avoid using appliances that generate heat. Use the microwave instead of the stove when possible.

NOTICE

Efficient Cooling: *For best results, cool the interior before outdoor temperatures peak. Early use reduces the strain on the air conditioning system.*

NOTICE

Recommended Temperature: *For best results, cool the interior before outdoor temperatures peak. Early use reduces the strain on the air conditioning system.*

CAUTION

Temperature Set Point: *Avoid setting the air conditioner to extremely low temperatures for extended periods. Doing so may overwork the system and reduce efficiency or lifespan.*

CLEANING AND MAINTENANCE

Proper maintenance of the Gree roof air conditioner is essential to ensure optimal performance, prevent water leaks, and extend the life of the unit. Regular cleaning helps maintain airflow, improves cooling efficiency, and reduces the risk of mold, odors, or mechanical issues.

Maintenance should be performed periodically, ideally before and after each travel season, and more frequently if the RV is used in dusty or humid environments. Always follow safety procedures and ensure the unit is powered off before performing any cleaning or inspection.

CAUTION

Cleaning Return Air Filter: *Improper cleaning of the Gree roof air conditioner's return air filter may cause water to leak into the ceiling area. Always remove the return air filter before applying water or cleaning solution. Do not spray water directly into the air return grille or evaporator area. Moisture entering the unit may cause water leakage inside the ceiling or damage electrical components.* **Ensure all parts are completely dry before reinstalling.**

CAUTION

External Inspection: *Regularly inspect the exterior of the roof unit for debris, leaves, or other obstructions. Remove any debris carefully to prevent damage to the fan or vents.*

WARNING

Power Safety: *Do not attempt to service the air conditioner or fan while the RV is connected to shore power or the battery system. Disconnect power before performing any maintenance.*

HOW TO REMOVE THE AIR FILTER

1. Ensure the air conditioner is powered off and disconnected from shore power or the battery system.

2. Locate the return air filter behind the air intake grille.

3. Pull the filter straight out from the unit as illustrated. Handle the filter carefully to avoid damage.

4. Inspect the filter for visible dirt, dust, or debris. Replace the filter if it shows signs of significant wear or damage.

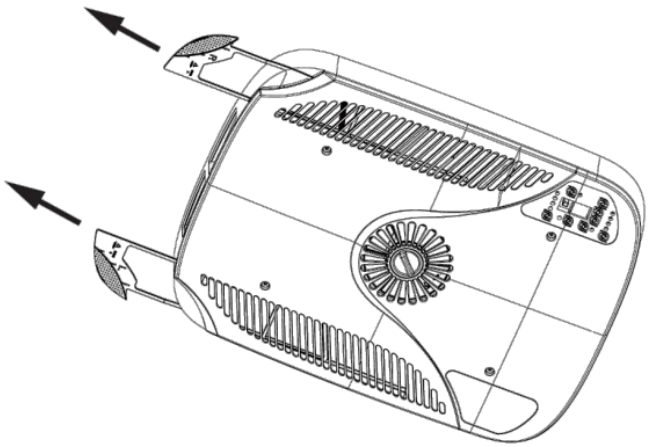

HOW TO CLEAN THE AIR FILTER

1. Remove Dust: Shake off loose dust and debris from the filter over a trash can or outdoors.

2. Vacuuming: Use a household vacuum cleaner with a soft brush attachment to remove remaining dust. Avoid using excessive force that may damage the filter mesh.

3. Washing: If the filter is heavily soiled, rinse it gently under clean, lukewarm water. Do not use harsh chemicals or solvents.

4. Drying: Allow the filter to air dry completely before reinstalling. Never reinstall a wet or damp filter, as moisture may lead to water leakage or mold growth inside the unit.

5. Reinstallation: Slide the filter back into its original position, ensuring it is seated securely and fully in place.

NOTICE

Filter Inspection: *Regularly inspect the filter for tears, holes, or excessive dust accumulation that could impair airflow.*

NOTICE

Cleaning Frequency: *Check and clean the air filter at least once every three months, or more often in dusty or high-traffic environments. Frequent maintenance improves cooling efficiency and reduces stress on the A/C system.*

CAUTION

Moisture Risk: *Do not operate the air conditioner with a wet or improperly installed filter. Moisture entering the unit may cause water leaks and damage internal components.*

WARNING

Filter Damage: *Operating the air conditioner with a torn or damaged filter may allow debris into the unit, causing internal damage and reduced airflow.*

DANGER

Mold and Health Risk: *Failure to maintain the filter properly can result in mold growth or airborne contaminants, which may cause respiratory issues for occupants.*

INFO

Refer to Manufacturer's Manual: *For detailed operating instructions, temperature control settings, maintenance, and safety guidelines for the roof air conditioner, please refer to the documentation provided in the warranty package or consult the manufacturer's official website.*

HOLDING TANK VENT CAPS

The holding tank vent caps are roof-mounted openings that connect to the RV's black and gray water tanks. Their primary function is to allow air to flow in and out of the tanks, which ensures proper tank operation and prevents pressure build-up. Venting also directs odors safely outside the vehicle, helping maintain a clean and odor-free living area.

FUNCTION

- **Airflow Regulation:** Vent caps allow air to exit the tanks as water and waste flow in, preventing vacuum conditions that could disrupt drainage.
- **Odor Control:** The vents provide an outlet for gases generated in the tanks, keeping unpleasant odors from entering the cabin.
- **Pressure Relief:** By allowing gases to escape, vent caps reduce the risk of pressure-related damage to the tank or plumbing system.

MAINTENANCE AND INSPECTION

- **Regular Cleaning:** Debris such as leaves or dirt can block vent caps. Inspect and clean them periodically to ensure unobstructed airflow.
- **Check for Damage:** Cracks or missing caps can cause leaks or allow insects and rodents to enter the system. Replace damaged vent caps promptly.
- **Winter Considerations:** In freezing conditions, check that vent openings are not blocked by ice or snow to prevent tank damage or backup.

NOTICE

Secure Fastening of Vent Caps: *Vent caps must remain securely fastened to prevent accidental removal while the vehicle is in motion.*

NOTICE

Correct Positioning for Proper Venting: *Ensure that vent caps are installed in a vertical position to maintain proper airflow and drainage.*

CAUTION

Exposure to Odors: *Avoid leaning directly over vent openings when emptying or servicing tanks; gases may be unpleasant or hazardous.*

WARNING

Obstructed Vents: *Do not attempt to modify or block vent caps. Any obstruction can cause pressure build-up and potential damage to the tanks or plumbing system.*

INFO

Refer to Manufacturer's Manual: *For detailed operating instructions, inspection, maintenance, and safety guidelines for the holding tank vent caps, please consult the manufacturer's official website.*

MAXXFAN DOME WITH LED LIGHT

The MaxxFan Dome Plus with integrated LED light is installed on the ceiling of the bathroom. It is designed to improve airflow, remove odors and moisture, and provide supplemental lighting within the bathroom area of your RV.

This compact roof-mounted fan includes an exhaust fan, integrated insect screen, and an LED light that operates independently. The unit runs on 12V DC power from the RV's electrical system and provides essential ventilation for increased comfort and moisture control.

FAN OPERATION

- **Opening the Lid:** Press the button on the handle to release the locking clip, then slide the handle away until the lid locks open.
- **Closing the Lid:** Press the button again and pull the handle toward you until it secures.
- **Activating the fan:** Press the ON/OFF button on the fan housing to start or stop exhaust operation. This function removes moisture, steam, and odors from the bathroom.
- **Insect screen:** The fan includes a non removable insect screen to prevent debris or insects from entering. Do not operate with screen removed.

CLOSED

OPEN

NOTICE

Do Not Operate Without Screen: *Never run the fan without the screen properly in place.*

NOTICE

Ventilation Tip: *When fan is in use, open a secondary vent or window slightly to improve airflow.*

CAUTION

Ventilation Use Only: *Use for air circulation only; do not exhaust flammable or hazardous vapors*

INTEGRATED LED LIGHT

This unit includes a built-in LED light embedded in the garnish (trim) ring, offering low-level illumination suitable for bathroom or shower use in your RV.

- The LED light is operated by a dedicated push-button on the garnish ring, allowing independent activation regardless of whether the fan is running.
- It is controlled via a push-button on the trim ring and can be used with the fan on or off.

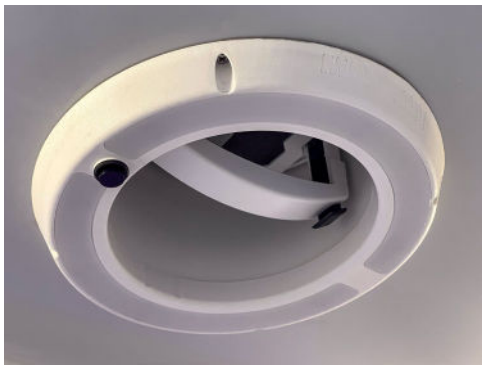

NOTICE

Power Source: *Ensure the unit is properly connected to 12 V DC. Disconnect power before cleaning or servicing.*

NOTICE

Close When Not in Use: *Keep lid closed when not operating to prevent air infiltration or ingress of dust.*

CAUTION

Avoid Obstructions: *Ensure objects do not block movement of lid or fan blades.*

CAUTION

Temperature Sensitivity: *Avoid using the unit continuously in extreme ambient temperatures to prevent performance issues or damage.*

WARNING

Electrical Safety: *Do not operate the fan or light with wet hands to prevent shock.*

WARNING

Hot Surface: *The LED and trim area may become warm during extended use—avoid touching immediately after operation.*

WARNING

Circuit Load Management: *On low-power systems, avoid running other high-draw devices while the fan is operating—risk of overload.*

INFO

Refer to Manufacturer's Manual: *or detailed operating instructions, ventilation and lighting functions, maintenance, and safety guidelines for the bathroom roof fan with integrated LED light, please refer to the documentation provided in the warranty package or consult the manufacturer's official website.*

DOME FAN AND LIGHT MAINTENANCE

Proper maintenance of the MaxxFan Dome Plus is essential to ensure long-lasting performance, reliable ventilation, and operational safety.

1. Regular Cleaning:

- Clean the fan blades, trim ring, and LED light using a mild soap and water solution only. Avoid abrasives or harsh chemicals. Wipe the edge of the trim ring and blades to remove dust or debris..

2. Screen Removal and Cleaning:

- Ensure the fan is OFF and power is disconnected. Remove the four screws securing the screen, detach it carefully, rinse with mild soap and water, and dry completely before reinstalling.

3. Fan Blade Inspection:

- Periodically inspect the fan blades for dust or debris. Wipe gently with a damp cloth, taking care not to bend or damage the blades.

4. Lubrication:

- Check the handle mechanism and locking clip for smooth operation. Apply a small amount of non-conductive lubricant if needed, avoiding electrical parts.

5. Component Inspection:

- Regularly inspect lid seals, gaskets, screws, and moving parts. Replace any cracked or damaged elements to prevent leaks or air infiltration

NOTICE

Regular Maintenance: *Periodically check for dust or debris buildup on the fan blades, trim ring, and housing. Clean regularly to maintain airflow and efficiency.*

NOTICE

Component Check: *Inspect screws, blades, and mechanisms for looseness or wear. Tighten or replace as needed.*

NOTICE

Seal Integrity: *Confirm that the dome gasket and seals are intact and functional. Replace damaged seals promptly.*

CAUTION

Avoid Harsh Cleaners: *Do not use abrasive cleaners, solvents, or alcohol-based products on fan or light components—they can compromise hardware and surfaces.*

CAUTION

Fan Blade Clearance: *Ensure no obstruction or debris interferes with fan blade movement, which can lead to overheating or motor stress.*

CAUTION

Disconnect Power Before Servicing: *Always turn off and disconnect the RV's battery or power source before servicing to prevent accidental activation or electric shock.*

CAUTION

Ventilation Use Only: *The fan is intended for general ventilation—not to exhaust flammable or hazardous vapors.*

SOLAR POWER SYSTEM

Vacanza's 24 RV's include three 100 W monocrystalline Renogy solar panels mounted on the roof. These panels supply auxiliary charging for the house battery bank by converting sunlight into DC electricity.

Solar charging supplements energy provided by the vehicle's alternator and shore power when available and is particularly beneficial for maintaining battery charge during off-grid use or storage. Solar energy is silent, emissions-free, and contributes to the overall sustainability of the vehicle's power system.

SOLAR POWER SYSTEM MANAGEMENT

The solar panels are wired into the battery charging system through a charge controller, allowing automatic energy flow during daylight hours. When sunlight is available, the panels generate current that helps maintain the battery bank in a charged state.

The system passively supports battery health by reducing discharge depth and extending usable time between plug-in charging cycles. Solar energy is generated whenever sunlight is available, helping maintain battery charge during periods of low use or off-grid storage. Charge delivery adjusts based on sunlight intensity and battery condition, with no need for user interaction.

NOTICE

Battery Maintenance: *Solar panels help keep the house batteries charged when the vehicle is parked or not in use, preventing deep discharge and supporting long-term battery life.*

NOTICE

System Monitoring: *Solar charging occurs automatically based on available sunlight. There is no solar charge percentage display, but overall battery status can be monitored via the Garmin control panel or Lithionics app.*

CAUTION

Roof Access: *Use caution when accessing the roof to inspect or clean solar panels. The surface may be slippery, especially when wet. Improper handling may damage panel surfaces or seals.*

WARNING

Electrical Hazard: *Always disconnect the main battery power before performing maintenance or cleaning near solar panel wiring or connections. Solar panels generate electricity whenever exposed to sunlight, even when the system is turned off.*

WARNING

Do Not Cover Panels: *Avoid covering solar panels with tarps, luggage, or other items while parked. Obstructing sunlight may reduce battery performance and lead to incomplete charging during storage.*

INFO

Refer to Manufacturer's Manual: *For detailed installation guidelines, wiring specifications, and maintenance instructions related to the Renogy RNG-100D-SS 100W monocrystalline solar panels, consult the official Renogy Solar Panel User Manual.*

VACANZA RV PASSENGER SIDE DIAGRAM

This section provides a general overview of the exterior features located on the passenger side of your RV, including access systems and utility components.

1. POWER AWNING

The automatic awning is operated through the Garmin Control System. It extends and retracts electronically to provide shade and protection from the elements when parked.

2. UTILITY COMPARTMENT

This exterior compartment includes:

- 110V household-style power outlet for connecting external appliances or accessories.

3. EXTERIOR SLIDING ENTRY STEP

The RV features a powered sliding step for safe and convenient entry. Key features include:

- **Automatic Retraction:** The step retracts automatically when the vehicle ignition is turned on to prevent driving with the step extended.
- **Warning Buzzer:** A step-out warning buzzer alerts the driver if the step is extended when the vehicle is in motion.
- **Control Location:** The step is controlled using a black switch located inside the RV, near the main entry door on the passenger side, directly below the Garmin Control System screen.

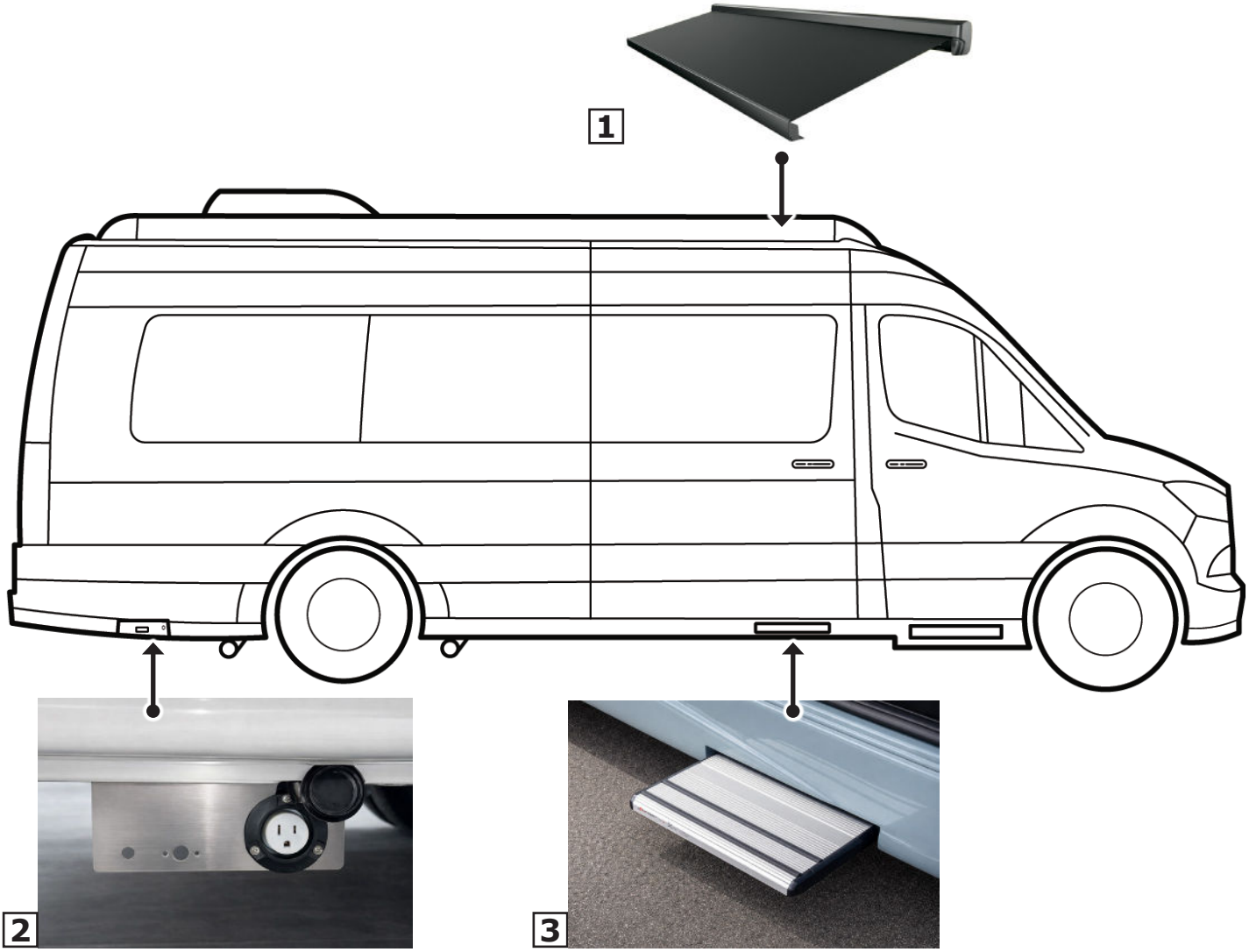

POWER AWNING

The vehicle is equipped with a lateral-arm awning from Girard Systems, model GRT750, which extends approximately 8 ft and spans up to 14 ft wide.

Designed without upright legs, this awning offers a streamlined appearance and ease of use. Its fully enclosed casing houses a 12V DC motor that powers both extension and retraction at the press of a button.

AWNING OPERATION

- The awning is controlled exclusively through the Garmin control system touchscreen.
- **To EXTEND the awning:** Tap the "Home" screen and select the Awning function. Press the "Extend" (Ext) button; the awning will automatically unroll until it reaches its preset limit.
- **To RETRACT the awning:** Press "Retract" (Ret). The awning will stop on its own once fully retracted.
- If you wish to stop it at any point mid-motion, tap the same button again.

NOTICE

Limit Setting & Timing: *The motor has built-in limit settings for open and close positions; avoid operating continuously for more than 4 minutes per hour to prevent overheating.*

NOTICE

Manual Override Use: *Manual override is intended only for emergency retraction. It does not support extension and requires significantly more effort. Be sure the awning is fully latched when done.*

NOTICE

Awning Light: *The awning will extend without turning on the integrated LED light. To activate the light strip, navigate to the "Lights" section on the Garmin control system. There, you will find the option to turn the awning light on and adjust its brightness level as needed.*

CAUTION

Stationary Operation Only: *Only operate the awning when the vehicle is parked and stable.*

CAUTION

Retract When Unattended: *Always retract the awning when leaving the vehicle unattended or before driving.*

CAUTION

Ignition Lock out Function:
The awning includes an ignition-lock out feature: *If the RV ignition is turned on you may not extend the awning, but you can still retract it.*

CAUTION

Severe Weather: *Even with auto-retract systems, strong winds or heavy rain may damage the awning. Always retract it when leaving unattended or during severe weather. Hands-off rely may lead to costly damage.*

WARNING

Motor Overheat Risk: *If the motor runs longer than recommended, it can overheat and fail. Avoid attempting repeated cycles without allowing time for motor cooldown.*

DANGER

Spring Tension Injury: *Awning arms are spring-loaded and generate high torque. Do not service or adjust arms without professional tools or assistance—incorrect handling can cause serious injury if arms suddenly release tension.*

MANUAL AWNING RETRACTION AND END CAP REMOVAL

Girard awnings utilize an end cap design with a rear support bracket integrated into the assembly. This section explains the procedure for removing the end cap and manually retracting the awning if the powered system is not operating.

Manual retraction should only be performed when necessary and with care to avoid damage to awning components.

END CAP REMOVAL

1. Locate the screw at the rear of the end cap cover of the awning.
2. Using a cordless driver with a #2 Phillips bit, remove the rear screw.
3. Support the cover firmly and apply controlled lateral pressure to release it from the mounting brackets attached to the awning assembly.

NOTICE

Manual Retraction: *Manual retraction is intended only for malfunction situations when the powered system cannot retract the awning.*

NOTICE

Unidirectional Override: *The manual override mechanism allows the awning to be closed only. The awning cannot be opened manually using this method.*

CAUTION

Controlled Handling: *Apply steady, even force when removing the end cap. Excessive force may damage the cover or mounting brackets.*

WARNING

Secure Before Driving: *Always verify the awning is fully retracted and secured before operating the vehicle. Failure to do so may result in equipment damage or create a road hazard.*

MANUAL RETRACTION PROCEDURE

If the awning motor is inoperative, the awning can be retracted manually as follows:

1. Remove the mechanism cover by unscrewing the two retaining screws (top and rear).

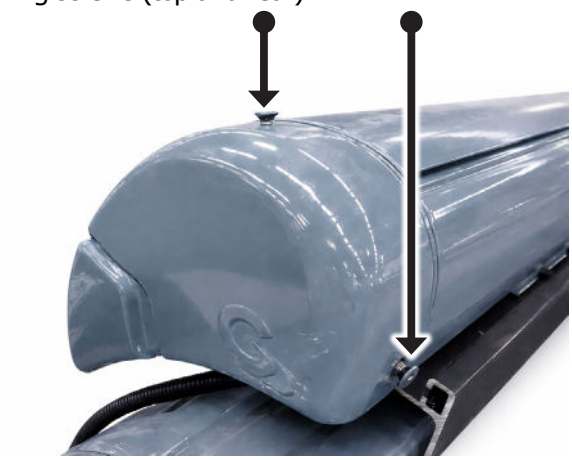

2. Using a 13 mm wrench, rotate the drive shaft clockwise until the awning is fully closed.

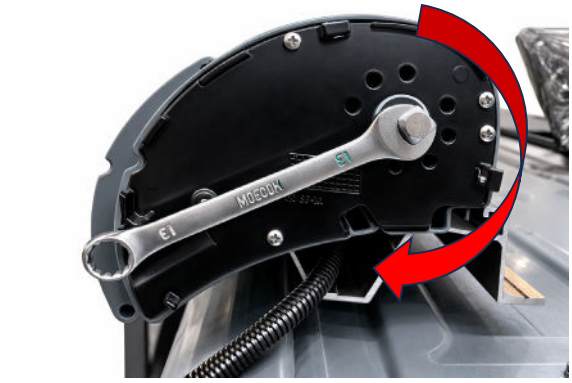

FUNCTIONAL LAYOUT OF THE GIRARD AWNING SYSTEM

The diagram below provides a general overview of the wiring and components involved in the Girard GRT750 awning system installed on your vehicle. It shows how the awning connects to power, lighting, and motor controls, as well as how it integrates with the Garmin Control System.

This layout helps illustrate how key components—such as the awning motor, light strip, motor controller, fuse protection, and digital control interface—work together to support proper operation of the extend and retract functions. The Garmin system interface allows users to control both awning movement and lighting from the touch panel. Use this diagram as a reference to better understand the awning's electrical connections and control path.

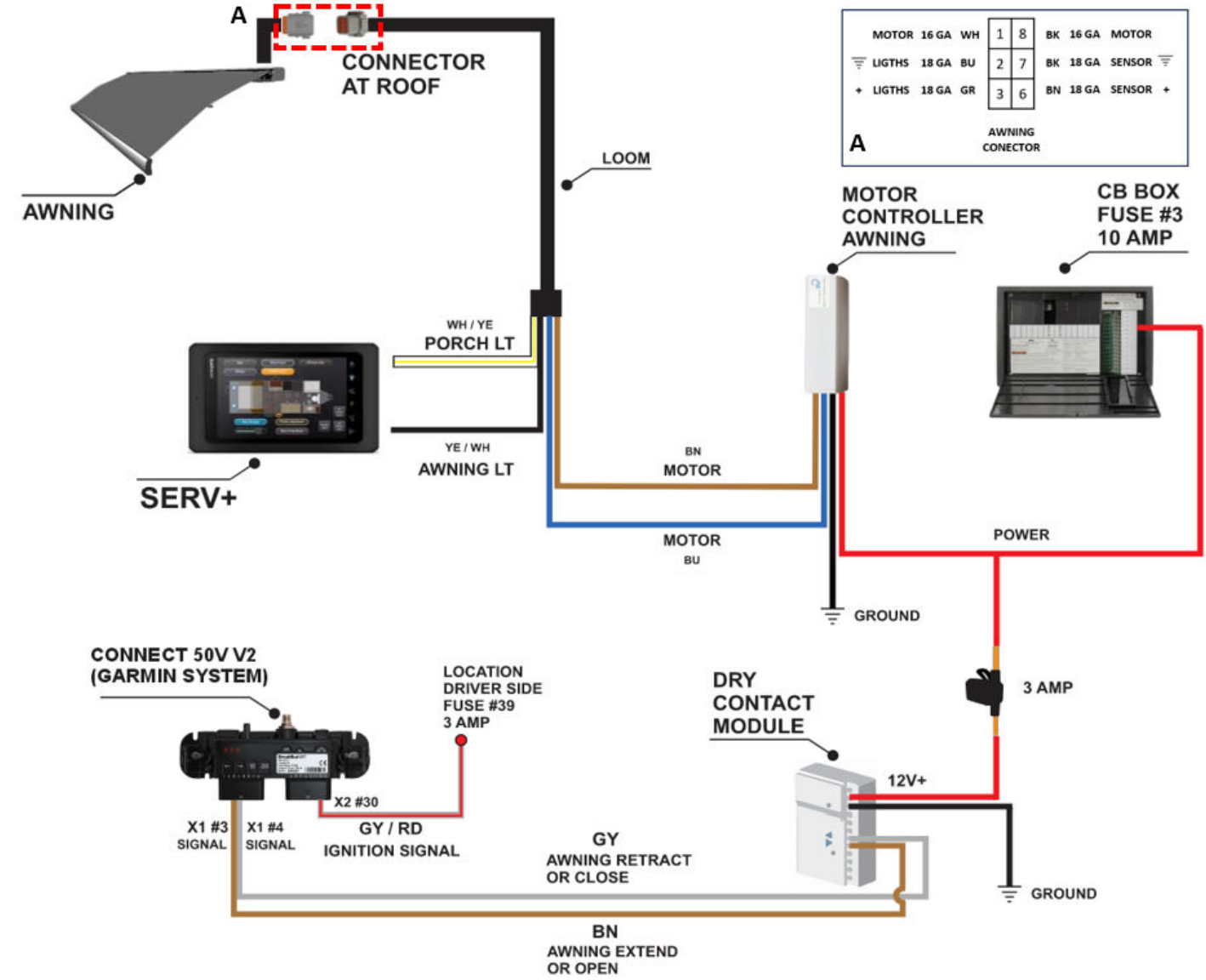

AWNING MAINTENANCE

Regular maintenance of the Girard GRT750 awning will help preserve its appearance and functionality over time. While the fabric is engineered not to rot or mildew, dirt can still accumulate on the surface. Fortunately, most surface dirt can be easily cleaned using lukewarm water, a soft cloth, and/or a soft-bristled brush.

For more stubborn marks or stains, a mild dishwashing detergent may be used. Avoid abrasive cleaners, strong chemical detergents, or high-pressure washers, as these may damage the awning fabric and reduce its effectiveness.

DEEP CLEANING INSTRUCTIONS

For more intense or set-in stains, follow these steps:

1. Prepare a solution with no more than ½ cup (4 oz.) of bleach and ¼ cup (2 oz.) of natural soap per gallon of water (at ~100°F).

2. Soak the fabric in this solution for about 20 minutes.

3. Rinse thoroughly using cold water to remove all residues.

4. Allow the fabric to fully air dry before rolling it back in.

NOTICE

Periodic Hardware Inspection: *Check mounting hardware, fasteners, and frame brackets every few months to ensure all components remain securely fastened. Vibrations during travel may loosen connections over time.*

NOTICE

Lubrication of Moving Parts: *Lightly lubricate pivot joints and moving arms with a silicone-based spray every six months to ensure smooth, quiet operation. Avoid petroleum-based lubricants which can damage seals and gaskets.*

CAUTION

Avoid Excessive Scrubbing: *Using abrasive brushes or applying excessive pressure while cleaning can degrade the fabric coating and reduce its water-repellent properties.*

WARNING

Electrical Components Are Not Waterproof: *Do not spray water directly onto motor housing or control wiring during cleaning. These components are weather-resistant but not designed to be soaked.*

DANGER

Flammable Cleaning Products: *Never use flammable solvents or harsh chemical cleaners near the awning. These may ignite or cause damage to the motorized components or fabric.*

WEATHER CONSIDERATIONS

Extended exposure to sun and heat can occasionally cause the fabric to stretch or shrink, resulting in wrinkles when the awning is retracted. If this occurs:

- Reopen the awning and leave it exposed to direct sunlight for several hours.
- The heat will naturally relax the fabric, helping remove wrinkles and restore a smooth appearance.

NOTICE

Awning Reactivity to Temperature Shifts: *Awning fabric may temporarily expand or contract based on weather conditions, causing minor sagging or tension. This is normal and resolves naturally as conditions stabilize.*

NOTICE

Seasonal Storage Tip: *If storing your RV during winter months, fully retract and secure the awning. Remove any accumulated debris or moisture beforehand to prevent material degradation or mechanical issues.*

CAUTION

Post-Storm Inspection: *After high winds or storms, inspect the awning for misalignment, bent arms, or fabric tension changes before next use. Do not operate if any visible damage is present.*

WARNING

Do Not Force Operation in Cold Weather: *Operating the awning in near-freezing conditions may put stress on stiffened fabric or motors. Forcing it to open or close may result in damage to the arms or internal components.*

DANGER

Lightning Risk: *Never use the awning during a thunderstorm. The aluminum frame and electrical components can pose a serious hazard if lightning strikes nearby.*

UTILITY COMPARTMENT

Located on the exterior side of the vehicle, the utility compartment provides an external electrical connection point for campsite or recreational use.

FEATURES

- **110V AC Power Outlet:** A standard household-style outlet that allows you to plug in external devices or appliances, such as lights, small tools, or cooking equipment, while parked.

NOTICE

Power Availability: *A standard household-style outlet that allows you to plug in external devices or appliances, such as lights, small tools, or cooking equipment, while parked.*

CAUTION

High Wattage Use: *Do not use high-wattage appliances in the external outlet unless you are certain the inverter and battery capacity can handle the load. Overdrawing power may trip the inverter or cause system shutdown.*

WARNING

Electrical Hazards: *Always inspect cords and plugs before use. Damaged cables or wet conditions can result in electric shock or fire. Never use the exterior outlet in rainy or wet environments.*

DANGER

Electrocution Risk: *Risk of serious injury or death by electrocution. Do not attempt to modify or repair the outlet yourself. Only qualified service personnel should perform electrical repairs.*

EXTERIOR SLIDING STEP

The curbside sliding door is equipped with a sliding step featuring:

- Auto extend and retract
- Step-out warning buzzer and indicator light
- Lock extended red switch located on the Garmin touchscreen near the sliding door.

Please read, understand, and instruct all passengers on the following operational and safety information regarding the step.

STEP OPERATION

The step extends and retracts automatically when the sliding door is opened or closed.

If the lock extended switch is off, the step will not extend, or it may remain extended even when the door is opened or closed and the engine is not running. The step will retract automatically when the engine is started and the sliding door is closed to prevent damage while the vehicle is in motion, regardless of the switch position.

CAUTION

Verify Full Extension: *Before exiting the vehicle, always confirm that the step is fully extended and locked in place. Partial extension may cause loss of balance or injury.*

CAUTION

Step Retraction: *Do not drive the vehicle until the step is fully retracted.*

CAUTION

Step Use: *Do not jump or apply excessive weight on the step. Always confirm it is fully extended and locked before stepping on it.*

WARNING

Hands and Feet Clear: *Do not place hands, feet, or objects near the step mechanism during operation. It can cause serious injury or mechanical damage.*

WARNING

Step Indicator: *If the step fails to retract, a warning light and buzzer will activate. The buzzer will not sound if the parking brake is engaged with the engine running.*

LOCK EXTENDED SWITCH

To use the lock extended switch while camping:

1. Turn the engine ON and switch the lock extended switch off.
2. Open the side sliding door to extend the step.
3. Turn the engine OFF.

The step will now remain extended while opening and closing the door. Turn the switch on to return the step to normal operation.

If you forget to turn the lock extended switch on before starting the engine, the step will retract automatically when the engine is started and sliding door is closed. The engine will always override the lock extended switch when running.

Resetting the Step:

- To reset the step, turn the engine OFF and switch on with the door closed.

EXTERIOR STEP LIGHTS

An undercarriage light has been added for your convenience. This step light can be turned on/off or dimmed using the Garmin control panel, located at the entry door under the Lights section, labeled "Outside Steps."

NOTICE

Step Light: *The exterior step light will only operate when general exterior lights are turned on.*

NOTICE

Step Care: *Keep the step clean and free of dirt or debris. Inspect it periodically to ensure smooth operation.*

WARNING

Automatic Operation: *The step automatically retracts when the door closes and ignition is ON. Stay clear during automatic movement.*

DANGER

Step Obstruction Hazard: *Never drive with the step extended or obstructed. This can cause severe damage or create a road hazard. Doing so can create a road hazard for others.*

VACANZA RV DRIVER SIDE DIAGRAM

This section provides a general overview of the exterior features located on the driver's (roadside) side of your RV, including water system access points, utility connections, and waste management components.

1. ROADSIDE UTILITY COMPARTMENT

This compartment houses essential water and power utilities. From left to right, it includes:

- **Fresh Water Holding Tank Fill –** Used to manually fill the onboard fresh water tank.
- **City Water Inlet –** Connects to an external pressurized water source to supply the RV's plumbing system directly.
- **Exterior Shower Port –** Exterior water connection port designed for attachment of a shower hose assembly.
- **Manual Black and Gray Tank Valves –** Individually operated pull valves that control the discharge of wastewater from the black and gray tanks.
- **Shore Power Cord Connection –** 30-amp, 110V power inlet for connecting the RV to external electrical service.

2. WASTE CONTROL SYSTEM

This compartment houses the RV's black and gray water discharge components. It includes:

- **Sewer Hose Storage Compartment –** Dedicated compartment for storing the sewer hose when not in use. This area is intended for hose containment only and is not connected to the holding tanks.
- **Sewer Discharge Connection –** Primary outlet used to drain the black and gray holding tanks. A standard RV sewer hose connects to this port for gravity discharge.

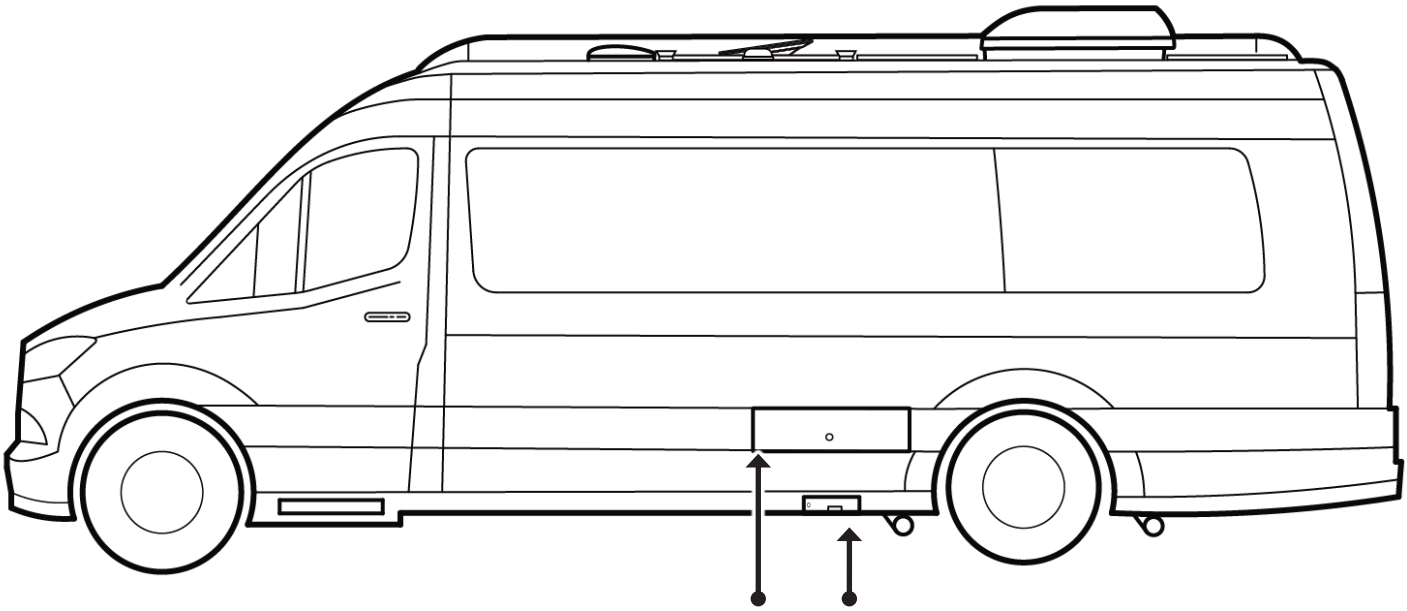

ROADSIDE UTILITY COMPARTMENT

This exterior compartment contains key water and power connections, arranged for convenient access while parked at campsites or service areas.

The system is equipped with manual dump valves that must be opened and closed by hand to control waste discharge and a sewer hose outlet connection.

FUNCTIONS

Fresh Water Holding Tank Fill:

- Used to manually fill the onboard fresh water tank. Always use a potable water hose when filling the tank to ensure a safe and clean water supply.

City Water Inlet:

- Connects directly to an external pressurized water source, supplying water to the RV's plumbing system without using the fresh water tank. Use only potable water hoses for this connection.

Exterior Shower Port:

- Exterior water connection port designed for attachment of a shower hose assembly.

Manual Black and Gray Tank Valves:

- Controls the discharge of wastewater from its respective tank. Pulling the valve handle opens the tank for dumping. Pushing the handle fully inward closes the tank.

Shore Power Cord Connection:

- 30-amp, 110V AC inlet for connecting the RV to campground or household electrical service.

WASTE CONTROL SYSTEM

This compartment manages the RV's black and gray water discharge systems.

The system is equipped with manual dump valves that must be opened and closed by hand to control waste discharge and a sewer hose outlet connection.

FUNCTIONS

Sewer Hose Storage Compartment:

- Dedicated compartment for storing the sewer hose when not in use. This area is intended strictly for hose containment and is not connected to the holding tank system. Always ensure the hose is properly drained, rinsed, and capped before storage.

Sewer Discharge Connection:

- Primary outlet used to drain the black and gray holding tanks. A standard RV sewer hose connects to this port for gravity discharge. Ensure all tank valves are closed before removing the cap, and securely reinstall the cap after use or before travel.

NOTICE

Flushing Procedure: *Always empty the black tank before the gray tank. The gray water will help rinse any residue from the hose.*

CAUTION

Hose Use: *Use only dedicated, clearly marked hoses for waste disposal. Never use a potable water hose for tank flushing.*

Winterizing your RV is a crucial process to prevent damage during periods of freezing temperatures or extended storage. Proper winterization helps protect critical components such as fresh water lines, waste drain lines, holding tanks, the water heater, and other plumbing fixtures.

WHEN TO WINTERIZE

Winterization is necessary in two scenarios:

- **Storage During Cold Months:** When parking the RV for the winter season.
- **Camping in Freezing Conditions:** When using the RV in regions where ambient temperatures may drop below freezing.

Before storing your RV, make sure to remove all perishable items, flush drain and holding tanks, provide ventilation, and protect the unit from weather exposure.

WHY WINTERIZATION MATTERS

Freezing water can expand and rupture pipes, fittings, and components, resulting in costly repairs. Winterizing protects:

- Plumbing systems (including the water pump)
- Fresh and waste water systems
- Toilet and sink components

Performing winterization correctly extends the life of the RV's systems and ensures your unit is ready to use in warmer months.

NOTICE

Timberline Heating System Coolant:
- The heating system coolant does not require winterization.
- You should test the coolant to confirm its freeze protection rating.

DOMESTIC WATER SYSTEM

The domestic fresh water system must be protected with RV antifreeze or fully drained. Two methods are available:

- **Air Blow-Out Method:** Open the low point drains and fixtures to remove water from system and use compressed air to clear water from the lines.
- **Antifreeze Fill Method:** Pump non-toxic RV antifreeze (propylene glycol) into the water system using the water pump. Open each fixture's hot and cold valves until antifreeze flows through.

NOTICE

Antifreeze Use Eliminates Draining: *Using antifreeze eliminates the need to drain the demand hot water exchanger.*

NOTICE

Inspection After Storage: *Even if not used in winter, it is recommended to inspect and maintain all water-related components after extended storage.*

CAUTION

Use Only RV Antifreeze: *Always use non-toxic propylene-glycol antifreeze formulated for RV plumbing systems. Do not use automotive antifreeze—it is toxic and can damage the water system.*

WARNING

Freezing Damage Risk: *Failure to properly winterize the water and waste systems may result in freezing and rupturing of water lines, fittings, tanks. Repairs can be costly and are not covered by warranty.*

DANGER

Flammable Vapors: *Do not store flammable liquids or operate open flames near the water heater, batteries, or macerator area during winterization or de-winterization. Vapors may ignite and cause injury or death.*

WINTERIZING PROCEDURE

Winterizing the RV ensures that all water systems are protected against freezing temperatures during storage or cold-weather operation. The following steps outline the proper procedure to introduce non-toxic RV antifreeze throughout the entire plumbing and waste system.

CAUTION

Level Surface Required: *Perform this procedure on a level surface to ensure proper antifreeze distribution throughout the system.*

STEPS FOR WINTERIZING

1. Drain Fresh and Waste Tanks: Drain the Fresh Water, Grey Water, and Black Water holding tanks completely.

2. Add RV Antifreeze: Use the designated winterization valve or bypass to introduce non-toxic RV antifreeze into the plumbing system.

3. Pressurize the System: Turn on the water pump and allow it to pressurize the system with antifreeze. Do not run the pump dry.

4. Run Faucets (Interior) Open each faucet—both hot and cold—one at a time. Allow antifreeze to flow for at least 5 seconds or until a steady pink stream is visible.

5. Run Shower Drain: Pour or run antifreeze down the interior shower drain for at least 10 seconds.

6. Flush Toilet: Flush the toilet pedal and allow antifreeze to flow through the bowl and valve until a steady pink stream is visible.

7. Macerator Toilet Flush: Continue holding the flush pedal for an additional 15–30 seconds to allow antifreeze to circulate fully.

8. Winterization Exterior Shower: Turn on both hot and cold valves at the exterior shower faucet until antifreeze flows out of the hose. Shut off the faucet and remove the hose assembly to prevent freeze damage.

9. Shut Off Water Pump: Once antifreeze has been fully distributed through all lines, turn off the water pump.

10. Relieve Pressure: Reopen all faucets to relieve any remaining pressure in the plumbing system.

11. Protect Holding Tank Plumbing: Open the electric dump valves and activate the macerator pump. Run until antifreeze flows from the tank drainage hose outlet.

12. Close System: Turn off the macerator pump and close all electric valves to seal the system against freezing conditions.

13. Protect Low Point Drain Valves: Briefly open the low-point drains until antifreeze is visible, then close them to protect the valves and adjacent lines.

NOTICE

User-Friendly System Design: *Grech RV water systems are designed so that the average owner can perform winterization without the time, inconvenience, or cost of dealer assistance.*

NOTICE

Low Point Drain Valve Location: *The Low Point Drain Valves are located on the driver's side of the vehicle, just in front of the rear tires.*

NOTICE

Level Surface Required: *It is important to winterize your RV on a level surface to ensure the RV antifreeze distributes evenly throughout the plumbing system.*

CAUTION

Remove and Drain Exterior Attachments: *While draining water from all faucets and the plumbing system, remove and fully drain any exterior components previously attached to the RV (such as hoses or exterior shower heads). Store them in a dry location to prevent damage from freezing.*

BYPASS VALVE OPERATION

The water system on your vehicle includes a bypass valve that allows the water pump to draw either from the fresh water tank (normal use) or from an RV antifreeze container (for winterization).

This valve is located near the strainer basket and water pump assembly.

NORMAL OPERATION

In normal operation, the valve handle should be in the horizontal position, allowing water to flow from the fresh water tank through the strainer to the pump.

This is the standard mode used for all regular plumbing functions inside the RV.

WINTERIZATION MODE

When preparing the RV for cold-weather storage, follow these steps to properly winterize the system:

1. Drain the water system through all faucets and drains.

2. Remove the strainer basket near the water pump to prevent trapped water from freezing and to allow clear suction flow.

3. Rotate the bypass valve counterclockwise until the handle is in vertical position so the pump draws directly from the antifreeze pickup hose.

4. Insert the pickup hose into an approved non-toxic RV antifreeze container and turn on the water pump. Once activated, the pump will circulate RV antifreeze through the entire water system to protect lines and fixtures from freezing.

AFTER WINTERIZATION

When winterization is complete and all lines have been treated with antifreeze:

1. Return the bypass valve to the horizontal position (normal mode).

2. Disconnect the antifreeze hose from the bypass fitting and close the antifreeze container.

3. Reinstall the strainer basket and insulation cover securely.

CAUTION

Incorrect Valve Position: *Operating the system with the valve in the wrong position can cause air to enter the water lines, loss of pressure, or pump damage. Always confirm the valve is in the correct position before using the water system.*

WARNING

Antifreeze Use: *Use only non-toxic RV antifreeze designed for potable water systems. Do not use automotive antifreeze; it is toxic and unsafe for RV plumbing.*

SYSTEM OVERVIEW

Your RV is equipped with an integrated water supply and waste management system, consisting of three main tanks—Fresh Water, Gray Water, and Black Water—along with plumbing connections, control valves, and monitoring systems. These components are designed to work together to provide safe, convenient, and efficient handling of potable water, wastewater, and sewage during your travels.

The system operates through:

- **Fresh Water Tank –** Stores potable water for use in faucets, shower, and toilet.
- **Gray Water Tank –** Collects used water from sinks and shower drains.
- **Black Water Tank –** Holds waste and sewage from the toilet.

All tanks are electronically monitored through the Garmin Control System, which displays accurate fill levels when tanks are clean and free of debris. This monitoring ensures timely emptying, prevents overflows, and helps maintain hygiene.

TANK CAPACITIES AND LOCATIONS

- **Fresh Water Tank –** 26 gallons. Located under the floor of the RV on the driver's side, near the black water tank.
- **Gray Water Tank –** 27 gallons. Located under the RV, beneath the cooktop and kitchen sink area on the passenger's side.
- **Black Water Tank –** 13 gallons. Located inside the RV, beneath the toilet on the driver's side.

Tank placement has been engineered to optimize weight distribution, maximize storage space, and protect plumbing components from potential road damage.

NOTICE

Regular Monitoring: *Check the Garmin Control System frequently to monitor tank levels. Timely emptying of tanks will prevent overflows and maintain system performance.*

NOTICE

Ventilation: *Ensure tank venting systems are unobstructed to prevent the buildup of unpleasant odors inside the RV.*

CAUTION

Maintenance: *Inspect and clean tanks regularly to prevent blockages or damage to valves and piping, which can lead to costly repairs.*

CAUTION

Water Quality: *Only use potable water hoses when filling the fresh water tank to avoid contamination from non-approved sources.*

CAUTION

Tank Capacity: *Be mindful of each tank's capacity to prevent overfilling, which can cause leaks, system strain, or component failure.*

WARNING

Freeze Protection: *In freezing temperatures, winterize the water system to prevent pipes and tanks from freezing and cracking. Failure to do so can cause severe damage.*

WARNING

Dump Valve Security: *Always ensure that dump valves are completely closed after emptying tanks to prevent leaks and avoid exposure to wastewater.*

DANGER

Contamination Risk: *Never allow the black water tank to backflow into the fresh water system. This can cause serious contamination and health hazards.*

DANGER

Hazardous Fumes: *When emptying black or gray tanks, be aware that gases emitted can be harmful if inhaled. Ensure proper ventilation and avoid prolonged exposure.*

TANK LEVEL SENSORS

Your RV is equipped with Tank Level Sensors for the Fresh, Gray, and Black water tanks. These sensors monitor the tanks and display their fill status as a moving bar on the Garmin touchscreen, reflecting current water or wastewater levels.

MONITORING TANK LEVELS

- Tank levels are shown on the Home screen of the Garmin Control System.
- The bar indicator rises as the tank fills and lowers as water or wastewater is used or emptied.
- Always monitor the bar before operating water systems or traveling to ensure sufficient capacity.

NOTICE

Bar Indicator: *The bar provides a visual approximation of tank levels. Use it as a guide and avoid overfilling.*

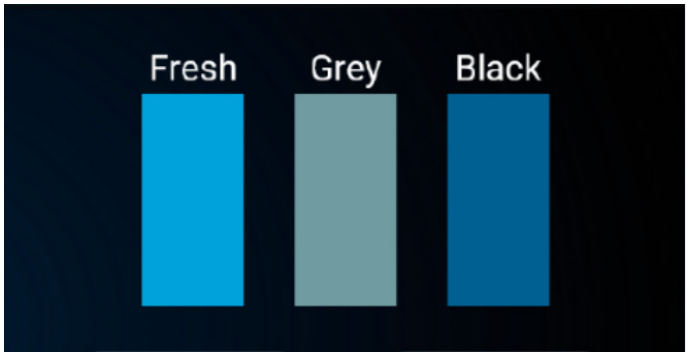

OPERATION

- The sensors auto-calibrate when powered on.
- If a new tank has been installed or emptied, the sensor will adjust automatically after normal use.
- The bar moves in real time to reflect filling or emptying of each tank.

CAUTION

Accurate Readings: *Keep tanks and sensors clean; residue or buildup can affect the bar's accuracy.*

ERROR REPORTING

If the sensor detects an issue, the Garmin screen may show abnormal bar behavior. Common causes include wiring issues or sensor malfunction.

WARNING

Persistent Errors: *Do not ignore abnormal readings. Contact your RV dealer or service center for inspection.*

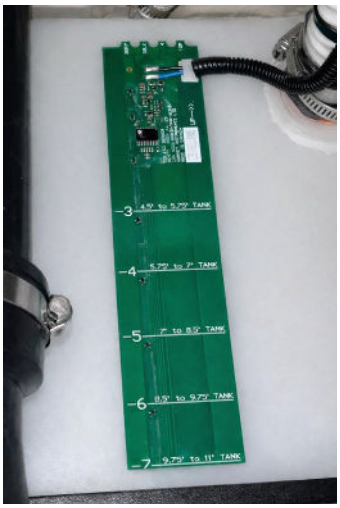

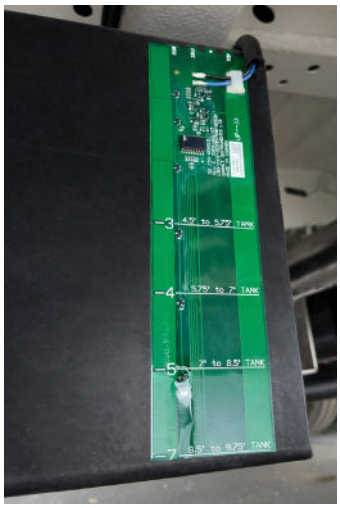

MAINTENANCE AND SAFETY

- Regularly clean around tank access points to prevent residue buildup.
- Ensure water and wastewater are handled properly for hygiene.
- Do not tamper with sensors or wiring.

DANGER

Electrical Hazard: *Sensors are part of the RV's electrical system. Do not touch or modify wiring.*

DANGER

Health & Sanitation: *Always handle tanks and wastewater according to proper sanitary procedures.*

FRESH WATER TANK FILL

The fresh water system supplies clean, pressurized water for drinking, cooking, cleaning, and personal hygiene. A 12-volt self-priming water pump draws water from the Fresh Water Tank and distributes it to all cold-water fixtures and the water heater whenever the RV is not connected to city water.

To fill the Fresh Water Tank:

- Connect a potable water hose to the Fresh Water Fill inlet located on the exterior of the RV. The tank is full when water begins to overflow from the vent, indicating it has reached capacity.
- Tank levels and pump status can be monitored in real time through the Garmin SERV+ Control System.
- When traveling, you may fill the tank before departure or closer to your destination. Filling closer to arrival can improve fuel efficiency and handling by reducing weight, as water adds approximately 8.3 lbs per gallon.
- Proper maintenance is essential to ensure water quality and system longevity. Periodically flush the tank to remove sediment, inspect fittings and hoses for leaks, and ensure the system is properly winterized during freezing temperatures to avoid damage.
- The Fresh Water Tank ensures a steady supply of water during travel or camping without hookups. Potable water fill stations are commonly available at campgrounds, gas stations, and convenience stores.

NOTICE

Regular Inspection: *Check fittings, hoses, and the tank area periodically to identify leaks or worn components.*

NOTICE

Tank Flushing: *Flush the fresh water tank regularly to remove sediment and maintain water quality.*

NOTICE

Trip Planning: *For extended travel with no hookups, fill the tank before departure.*

NOTICE

Winter Use: *In freezing temperatures, winterize the system to prevent freeze-related damage.*

CAUTION

Potable Water Only:*Use only potable (safe for drinking) water and a clean, dedicated potable water hose.*

CAUTION

Water Levels: *Monitor tank levels through the Garmin system to avoid unexpectedly running out of water.*

CAUTION

Weight Management: *Traveling with a full tank increases vehicle weight and may affect handling and fuel efficiency.*

CAUTION

Leak Checks: *Inspect the tank, fill port, and water lines regularly for signs of leakage.*

WARNING

Avoid Contamination: *Non-potable or questionable sources may introduce harmful bacteria into the system.*

WARNING

Freezing Hazard: *Water expands when frozen and can crack pipes, fittings, or the tank if not properly winterized.*

DANGER

Contamination Risk: *Filling from non-potable sources can pose serious health risks.*

DANGER

Electrical Hazards: *Keep water away from electrical components, especially near the water pump.*

DANGER

Slip Hazard: *Water overflow or spills can create slippery surfaces around the RV.*

WATER SUPPLY SYSTEMS

Your RV is equipped with two primary methods to supply water to its plumbing system: a City Water Connection for direct, continuous supply, and an Onboard Fresh Water Tank for self-contained use.

CITY WATER CONNECTION

The City Water Connection provides an efficient way to supply water directly to your RV's plumbing system without relying on the onboard Fresh Water Tank or pump. It uses line pressure from an external water source to deliver a continuous flow to all fixtures, including faucets, shower, and toilet.

Direct Hose Connection:

- Attach a potable water hose to the City Water Connection port on the exterior of your RV.
- When connected to a pressurized water source, there is no need to fill your fresh water tank or operate the onboard water pump.

Continuous Supply:

- The water flows directly into the RV's plumbing system, providing a steady supply to all fixtures, including faucets, shower, and toilet.

Pressure-Driven Operation:

- The city water pressure pushes water through the RV's pipes without relying on the pump, allowing for uninterrupted use.

NOTICE

Pressure Regulation: *Consider using a water pressure regulator when connecting to unfamiliar or high-pressure sources.*

WARNING

High Pressure Damage: *Without a pressure regulator, excessive water pressure may cause leaks or burst plumbing fittings.*

The city water connection and fresh water fill inlet are located in the Roadside Utility Center for easy access when connecting to a water source. Always use a hose rated for potable water to maintain a safe, clean water supply.

Proper use and monitoring of the Fresh Water Holding Tank will ensure a reliable water supply throughout your trip, whether you are on the road or at a campsite.

WHEN TO USE CITY WATER

- **Stationary Stays:** Ideal for campsites or RV parks with a reliable water hookup.
- **Continuous Supply Needs:** Eliminates the need to run the water pump
- **Ease of Use:** Connect and enjoy uninterrupted water flow without switching between systems.

NOTICE

User Awareness: *Learn how to connect and disconnect the city water system correctly to avoid damage or contamination.*

NOTICE

Filling Locations: *Always verify designated fill stations or ask campground staff for specific instructions.*

CAUTION

Hose Quality: *Only use hoses rated for potable water to prevent contamination.*

CAUTION

Winterization: *In freezing conditions, ensure all lines are properly winterized before use.*

WARNING

Contamination: *Never connect to a non-potable water source. Verify water safety before use.*

USING CITY WATER CONNECTION

1. ACCESS THE CONNECTION

- Open the Roadside Utility Compartment on the driver's side of your RV to locate the City Water Connection inlet.

2. OPEN THE PROTECTIVE INSERT

- Open the protective cap/insert from the city water connection.

3. ATTACH THE POTABLE WATER HOSE

- Use a potable water hose of the correct size with a rubber washer to ensure a tight seal.
- Verify the hose is clearly labeled for drinking water use.

4. USE A WATER PRESSURE REGULATOR

- Connect the regulator between the hose and the water source to protect your plumbing from excessive pressure.

5. TURN ON THE WATER SOURCE GRADUALLY

- Open the water supply at medium pressure to avoid sudden surges that can damage your RV's plumbing.

6. PURGE AIR FROM THE LINES

- Slowly open the cold water tap until water flows smoothly, then do the same with the hot water tap.
- To reduce splashing during purging, drape a washcloth over the faucet.

7. CHECK FOR LEAKS

- Inspect the hose ends, gaskets, and connection inlet. Tighten or replace parts if leaks are found.

WHEN CONNECTED TO CITY WATER

- **Pump Not Needed:** The external water pressure supplies the RV directly, so there's no need to run the onboard pump.
- **Stable Pressure:** Water flows continuously as long as the supply is active.
- **Safety First:** Keep water connections away from electrical outlets and components.

CAUTION

Check Connections: *Inspect hose ends, gaskets, and the city water inlet for leaks or wear before each use.*

WARNING

Leaks: *Address leaks immediately to avoid water damage and mold growth.*

DURING USE

When connected to City Water:

- **Pump Not Needed:** The external water pressure supplies the RV directly, so there's no need to run the onboard pump.
- **Stable Pressure:** Water flows continuously as long as the supply is active.
- **Safety First:** Keep water connections away from electrical outlets and components.

DANGER

Electrical Hazards: *Keep water connections away from electrical outlets and components to prevent shock or fire risk.*

FLUSHING THE SYSTEM

After disconnecting from city water, flush the system to maintain cleanliness and remove any residual water or contaminants:

1. Open all faucets and run water until it flows clear. This prevents buildup of contaminants and ensuring a fresh water supply when needed.

2. This is especially important after using an unfamiliar water source.

3. Flushing prepares the system for a smooth switch back to the Fresh Water Tank.

DISCONNECTING CITY WATER

1. Turn off the water source at the supply point.

2. Release pressure in the plumbing by opening a faucet inside the RV.

3. Disconnect the hose carefully, handling the inlet gently to avoid damage.

4. Store the hose cleanly, avoiding contact with the ground or contaminants.

5. Put the protective cap/insert of city waster connection back to, to protect the inside from debris and dirt.

DANGER

Improper Disconnection: *Never disconnect while the supply is on, as pressurized water can spray dangerously.*

CITY WATER PRESSURE REGULATOR

When your RV is connected to an external (city) water source, the incoming water pressure can vary greatly depending on the location or facility

Excessive pressure can cause leaks, hose failure, or damage to fittings, valves, or the shower head. A water pressure regulator helps ensure that water enters the RV plumbing system at a safe and consistent pressure level.

NOTICE

Pressure Regulation: *Most RV plumbing systems are designed to operate safely at pressures up to 50 psi (345 kPa). A regulator set to 40–50 psi is recommended for best performance.*

NOTICE

Connection Care: *Always use a drinking water–safe hose and avoid sharp bends or kinks that may restrict flow or stress fittings.*

NOTICE

After Disconnecting City Water: *When disconnecting from city water, close the water source, relieve system pressure by opening a faucet, and store the regulator and hose in a clean, dry place. Inspect O-rings or seals periodically for signs of wear or damage.*

CAUTION

High Pressure Damage: *Without a pressure regulator, excessive water pressure may cause leaks, burst fittings, or permanent damage to the RV's plumbing system.*

WARNING

System Safety: *Never attempt to repair or modify water pressure components while the system is pressurized. Always shut off the external water supply and open a faucet to relieve pressure before servicing.*

USING A WATER PRESSURE REGULATOR

Always install a water pressure regulator when connecting to an unfamiliar or high-pressure city water source. The regulator should be placed between the city water spigot and your drinking water hose.

1. Connect the regulator to the campground or facility's water outlet.

2. Attach your RV drinking water hose to the regulator outlet.

3. Connect the other end of the hose to the city water inlet on the vehicle.

4. Open the water source slowly to allow pressure to stabilize.

GRAY WATER TANK

The gray water tank in your RV collects all wastewater generated from activities using water, excluding toilet waste. This includes water from cooking, washing dishes, showering, and handwashing. The tank helps maintain hygiene and comfort during travel by preventing used water from being discharged directly into the environment.

DUMPING AND CONNECTIONS

The gray water tank is equipped with its own manual dump valve, referred to as the Gray Tank Valve. This valve is operated by hand and controls the discharge of gray water from the system.

The gray water tank and black water tank both discharge through the same sewer termination outlet. This shared termination point allows either tank to be emptied individually, or in sequence, at designated dump stations using a single external sewer connection.

DUMPING PROCEDURE

Proper disposal of black and gray water is essential for maintaining hygiene and the functionality of your RV's wastewater system. Follow these steps carefully to safely empty your tanks at designated dump stations, avoid spills, and protect the environment.

1. Ensure the vehicle is parked safely and level.

2. Connect a proper sewer hose to the external dump station.

3. Open the black water tank valve first, followed by the gray water tank valve.

4. Monitor the flow and use caution to avoid splashing.

5. Once empty, retract and store the hose properly, and close all valves.

6. Rinse the gray water tank and hose if possible to maintain hygiene and sensor accuracy.

CAUTION

Routine Maintenance: *Inspect the gray tank, its dump valve, and connecting pipes for leaks or wear during routine RV maintenance.*

CAUTION

Disposal Practices: *Always empty the gray tank at an approved dump station to comply with environmental regulations and prevent pollution.*

WARNING

Overflow Hazard: *Failing to empty the gray tank when full can cause wastewater to back up into sinks or showers, creating unsanitary conditions.*

WARNING

Odor Prevention: *Stale water in the gray tank can develop strong odors. Empty the tank regularly and flush it when possible.*

DANGER

Health Risk: *Gray water may contain food particles, soap residue, and bacteria. Avoid skin contact and always wash hands after handling hoses or valves.*

DANGER

Pressure Release Hazard: *When opening the dump valve, be prepared for possible pressure buildup. Stand clear to prevent wastewater from spraying, which can cause contamination or injury.*

BLACK WATER TANK

The black water tank in your RV is designed to collect and store wastewater from the toilet only. Proper operation and maintenance are essential for hygiene, odor control, and to prevent damage to the RV's plumbing system.

DUMPING AND CONNECTIONS

The black water tank is equipped with its own manual dump valve, referred to as the Black Tank Valve. This valve is operated by hand to control the discharge of waste.

The black water tank connects to the same sewer termination outlet used by the gray water tank, allowing both tanks to be emptied at designated dump stations using a single external connection. Waste should only be discharged at approved dump facilities.

MAINTENANCE AND BEST PRACTICES

- **Regular Emptying:** Empty the black and gray tanks regularly, especially before storing the RV, to prevent buildup, odors, and clogs.
- **Tank Treatments:** Use approved tank treatments to help break down waste and control odors.
- **Valve Care:** Keep the dump valves and surrounding areas clean to ensure proper operation and prevent leaks.
- **Inspection:** During routine maintenance, inspect the gray and black tanks, dump valves, and connecting pipes for signs of leaks or wear.

WARNING

Use RV Toilet Paper Only: *Use only RV-specific toilet paper in the black water holding tank. Standard household toilet paper can clog or damage the macerator pump and sanitation system.*

CAUTION

Personal Safety: *Always wear disposable gloves when connecting, disconnecting, or operating the waste disposal system.*

CAUTION

Secure Connections: *Confirm that all hose fittings and dump valve connections are locked in place before starting the emptying process to prevent leaks or spills.*

WARNING

Odor Prevention: *Failing to empty the black tank in a timely manner can result in strong sewage odors that may be difficult to eliminate.*

WARNING

Leak or Overflow Risk: *Overfilling the tank may cause wastewater to leak or back up into the RV, leading to contamination and costly repairs.*

DANGER

Health Hazards: *Black water contains harmful bacteria and pathogens. Direct contact should be avoided at all times.*

DANGER

Drainage Pressure Hazard: *Open the dump valve slowly to avoid sudden release of built-up pressure, which could cause waste to spray and create a contamination risk.*

CAPACITY MONITORING

Tank levels can be monitored using the Garmin Control System, which provides real-time readings of all tank's fill status. Always empty tanks before it reaches full capacity to prevent overflows and potential damage.

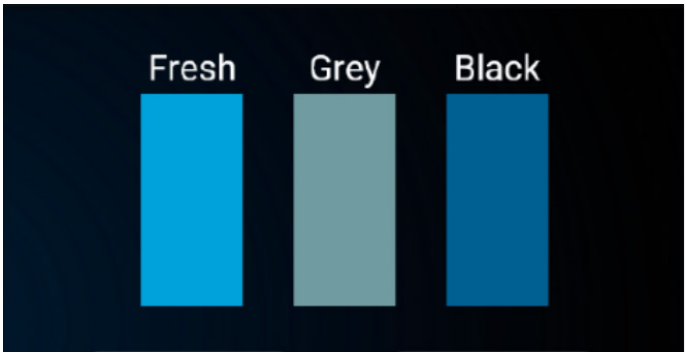

EXTERIOR SHOWER

The exterior shower is located inside the Roadside Utility Compartment and provides a convenient water source for rinsing off outdoors. It is designed for quick personal cleanups, rinsing off sand or mud, washing pets, or cleaning gear before bringing it inside the RV.

SYSTEM DESCRIPTION

The unit includes a water connection point compatible with a detachable water hose or handheld shower head. The shower is equipped with both hot and cold water controls, allowing you to adjust the temperature based on your needs.

WATER SUPPLY OPTIONS

- **Onboard Water Pump:** When not connected to an external water supply, the exterior shower can draw water from the RV's fresh water tank via the onboard pump.
- **City Water Inlet:** When parked and connected to a city water source, the shower can operate without relying on the RV's tank or pump.

NOTICE

Proper Connection: *Always ensure the hose or shower head is securely attached to the inlet before turning on the water supply.*

NOTICE

Post-Use Drainage: *After use, drain any remaining water from the hose or shower head to help prevent freezing or damage.*

NOTICE

Interior Cleanliness: *Use the exterior shower to rinse off dirt or debris before entering the RV to maintain a clean interior.*

CAUTION

Freezing Risk: *In cold conditions, winterize the exterior shower unit to prevent water line damage due to freezing.*

CAUTION

Water Conservation: *If using the onboard pump, monitor your fresh water levels to avoid running out, especially when camping off-grid.*

CAUTION

Proper Storage: *When not in use, disconnect and store the hose and shower head securely to avoid damage from UV exposure or weather.*

WARNING

Slip Hazard: *Wet ground near the exterior shower area may be slippery. Use caution to prevent slips and falls.*

WARNING

Water Pressure: *If using the city water connection, be aware that high pressure may damage the hose or shower head. Use a pressure regulator if needed.*

SMART PLUG (SHORE POWER INLET)

The Smart Plug is a 30A, 120V electrical inlet located in the roadside utility compartment of the vehicle. It provides an alternative method to supply power and charge the RV, allowing onboard systems and batteries to operate while connected to an external AC power source.

It allows the RV's electrical system to:

- Power lights, outlets, appliances, and electronics while connected to shore power.
- Charge the house batteries through the inverter/charger system.
- Coordinate safely with the RV's power management system, protecting circuits and other components.

USAGE INSTRUCTIONS

1. Ensure the RV is parked on a stable, level surface before connecting.

2. Verify the external power source matches the plug rating (30A, 125V) and is properly grounded. Connect shore power cord to power source.

3. Firmly insert the shore power cord into the Smart Plug connector in the road side service compartment.

4. Confirm the power indicator on the Garmin control system shows the unit is receiving shore power.

5. When using a 15A power source and adapter, select the correct shore power inlet setting on the Garmin Control System to safely limit current and avoid overload.

NOTICE

Power and Cord Management: *Ensure the shore power cord is properly managed to prevent tripping hazards, kinks, or damage.*

NOTICE

15A Power Limitation: *When using a 15-amp external power source with an adapter, total available current is reduced. High-demand components such as air conditioning or the microwave may not operate simultaneously. Monitor total power load on the Garmin Control System to prevent overload.*

CAUTION

Connection and Service: *Inspect the plug and cord for damage before each use. Always turn off external power before performing maintenance on the RV electrical system.*

CAUTION

Wet Conditions: *Do not connect the Smart Plug in wet conditions or with water around the plug to reduce the risk of electrical shock.*

CAUTION

15A Adapter Usage: *To prevent overloading some appliances may not operate when using a 15-amp external power source. Monitor power usage via the Garmin control system.*

MAINTENANCE TIPS

- Keep the compartment and plug clean of debris, dirt, and moisture.
- Close the protective cover when the smart plug is not in use.
- Periodically check for tight connections and corrosion on terminals.
- Inspect the power cord for cuts, frays, or damage before each use.

NOTICE

Seasonal Use: *Disconnect and store the cord properly during extended periods of non-use to prolong lifespan.*

WARNING

Proper Connection: *Ensure the connector is fully seated to prevent arcing, overheating, or electrical faults.*

DANGER

Electric Shock and Fire Risk: *Do not handle the plug or cord with wet hands. Never use damaged cords or plugs. Replace immediately if frayed, cracked, or showing wear.*

INTEGRATION WITH GARMIN CONTROL SYSTEM

The Garmin Power & Energy screen provides centralized monitoring and management of the RV's electrical systems. From this screen, users can view real-time status, adjust settings, and control key components.

Available functions include:

- **System Status:** Displays the status of the alternator, house batteries, inverter/charger, and shore power input.
- **Charger/Inverter Control:** Turn on/off the inverter or charger independently to manage energy flow.
- **Input Current Limit & Options:** Users can view and adjust the shore power current limit according to available external power. The screen shows AC load, indicates which high-power appliances (air conditioner compressor/ heat pump, cooktop, microwave) are active, and allows selection of operating modes, including 15A adapter settings. Adjusting the limit helps prevent overload and may temporarily restrict operation of certain high-draw components.
- **LED Indicators:** Visual indicators show overall power status, faults, and overload conditions.
- **Monitoring Only:** Connecting or disconnecting the Smart Plug must always be done manually.

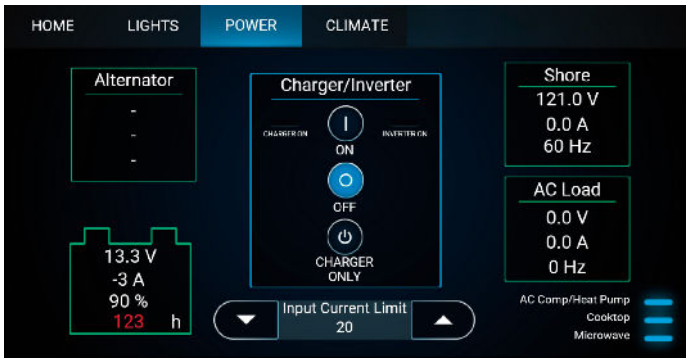

NOTICE

Shore Power 15A Operation: *When connected to a 15A external power source, always select the 15A mode in the Garmin Control System. This limits current to prevent overload and may restrict the operation of certain high-draw components. Ensure critical systems are monitored and avoid running multiple high-power appliances simultaneously.*

WARNING

Overload Risk: *Avoid turning on multiple high-power appliances simultaneously if house batteries or shore power is limited.*

DANGER

Electrical Shock / Fire: *Never tamper with the inverter, charger, or AC circuits; risk of severe injury or fire.*

GFI RECEPTACLE OUTLET

Your RV is equipped with Ground Fault Interrupter (GFI) receptacles. All passenger-side outlets in the vehicle are protected by GFI devices. A GFI is a fast-acting safety breaker that monitors the electrical current in a circuit and quickly shuts off power if a ground fault is detected.

A ground fault occurs when electrical current leaves its intended path—such as from a hot wire directly to the ground—creating a risk of electric shock. GFIs continuously monitor the amount of current flowing into and returning from an appliance or tool. Under normal operation, these values are equal. If there is a mismatch, the GFI detects the irregularity and opens the circuit.

GFI COVERAGE IN THE RV

GFI receptacles are installed on the passenger side of the vehicle, where electricity may be used near water sources. A single GFI outlet may protect multiple outlets downstream in the circuit. Power is supplied to the GFI outlet from the circuit breaker panel, and any connected outlets beyond it are also protected.

If the GFI trips, it may cut power to several outlets in the RV. This is normal and expected behavior. Simply resetting the GFI will restore power to all protected receptacles.

CAUTION

Shock Hazard Still Possible: *While GFI protection reduces the risk of electric shock, it does not eliminate it completely. Individuals with heart conditions or small children are particularly vulnerable, as even low levels of current can cause severe injury, burns, or cardiac arrest.*

DANGER

Risk of Electrocution: *If a ground fault occurs, the most dangerous outcome is that the electrical current may pass through your body, especially if you are in contact with a grounded object or water, leading to electrocution. The GFI receptacle detects the current imbalance and shuts off power within milliseconds, helping to prevent serious injury or death.*

TESTING THE GFI

GFI devices should be tested once a month to ensure proper functionality. To test:

1. Press the "TEST" button on the GFI receptacle or on the Power Distribution Panel.
2. The circuit should immediately trip, cutting power to all protected outlets.
3. Press the "RESET" button to restore power.

If the circuit does not trip during testing, or fails to reset, the GFI device may be malfunctioning and should be replaced by a qualified technician.

NOTICE

Multiple Outlets May Lose Power: *A single GFI receptacle can protect several other outlets on the same circuit. If power is lost in multiple passenger-side outlets, check the main GFI receptacle first and reset it if necessary.*

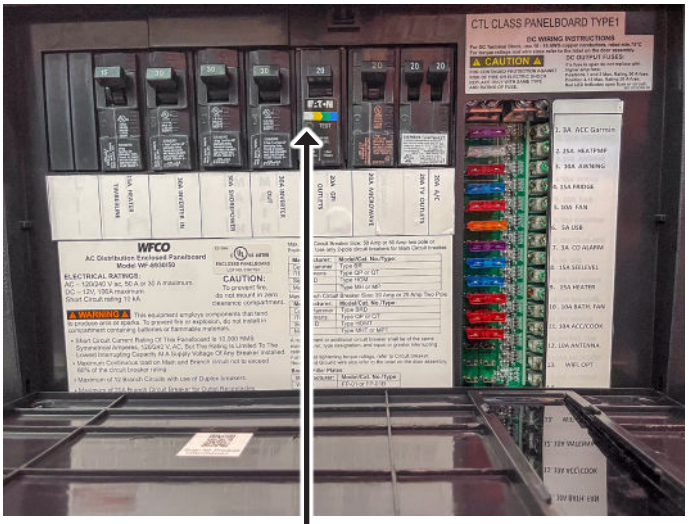

BATTERY MANAGEMENT SYSTEM (BMS)

The Battery Management System (BMS) is a critical component of the Lithionics® 51V lithium-ion battery modules installed in your vehicle. This advanced system is responsible for protecting, controlling, and optimizing the performance and lifespan of the batteries.

Your RV includes two 51V, 165Ah lithium-ion batteries, providing approximately 16,896Wh of total capacity, each equipped with the NeverDie® BMS and iONbus® smart communication interface.

The BMS ensures that the batteries operate safely under all conditions, manages charging and discharging, and communicates with other vehicle systems to maintain stable power delivery.

BMS CHARACTERISTICS

The integrated Battery Management System (BMS) built into the Lithionics® 51V battery actively monitors, protects, and communicates with other onboard systems to ensure safe and efficient operation.

Voltage Regulation:

- Continuously monitors and balances individual cell voltages to ensure safe and efficient performance.

Overcurrent and Short-Circuit Protection:

- Prevents battery damage by interrupting current flow during abnormal load or fault conditions.

Overcharge and Overdischarge Protection:

- Automatically disconnects the battery from charging or loads if voltage exceeds or drops below safe limits.

Temperature Monitoring and Control:

- Actively tracks internal battery temperature. If temperatures fall below 43°F (6°C), the internal 70W heater activates to allow safe charging down to -4°F (-20°C).
- For optimal performance in cold climates, it is recommended to keep the batteries above freezing temperature whenever possible. If the vehicle is stored in subfreezing conditions, ensure the BMS and heaters are active before initiating any charging cycle.

State of Charge (SoC) Estimation:

- Tracks how much energy is available in the battery and estimates remaining runtime.

Bluetooth Diagnostics:

- Enables real-time battery status monitoring through the Lithionics Battery® Monitor App..

State of Health (SoH) Monitoring: Provides information about overall battery condition.

iONbus® Smart Integration:

- Uses CAN-based communication to interface with other onboard systems such as the Garmin SERV+™ control panel, Grech Connect™ platform, Victron inverter/charger, and ARCO Zeus alternator.

NeverDie® Low Voltage Disconnect:

- Protects against over-discharge by automatically disconnecting power when critical low-voltage thresholds are reached, preserving battery health and preventing permanent damage.

Event Logging and Fault Detection:

- Stores error conditions and system events for advanced diagnostics and service support.

Bluetooth Diagnostics:

- Enables real-time battery status monitoring through the Lithionics Battery® Monitor App.

IMPORTANCE OF BMS

The BMS is what allows high-capacity lithium-ion battery systems to function safely and reliably in RV environments. Without a BMS, lithium-ion batteries are susceptible to thermal runaway, deep discharge damage, cell imbalance, or electrical faults.

The NeverDie® BMS used in your system meets stringent industry standards, helps extend battery lifespan, and ensures optimal performance in all climate conditions and usage scenarios.

BMS TROUBLESHOOTING

If your house batteries are not performing as expected, the BMS troubleshooting steps can help identify common issues safely.

TROUBLESHOOTING STEPS

1. Check Connections: Ensure all wiring is secure and undamaged.

2. Verify Voltage: Use a multimeter to check that battery voltage is within the safe range.

3. Inspect Fuses: Look for any blown fuses and replace if necessary.

4. Reset BMS: If needed, reset the BMS using the reset procedure below.

BMS RESET/SWITCH OPERATION

The NeverDie® BMS includes a physical Power/Reset button located directly on the Lithionics® battery housing. This switch serves three functions:

- Turning the BMS ON
- Turning the BMS OFF
- Resetting the system after a protective shutdown

To reset the BMS:

1. Ensure the RV is connected to a valid charge source (shore power, alternator, or solar).

2. Confirm voltage has risen above the recovery threshold.

3. Press and hold the Power/Reset button for approximately 3–5 seconds.

4. The LED will change from red or amber to green, indicating normal operation has been restored.

Avoid pressing the switch repeatedly or holding it excessively, as this may trigger additional protective cycles.

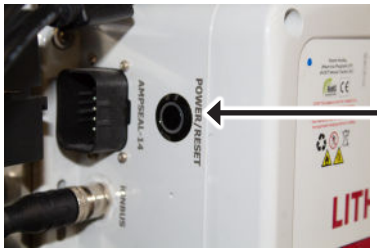

POWER/RESET BUTTON

CAUTION

Persistent Issues: *If the BMS continues to show a fault after following these steps, contact Lithionics Battery support or your Grech RV dealer.*

STANDARD BMS FUNCTIONS

The BMS includes standard functions to ensure safe and efficient battery operation.

1. State of Charge (SoC) Monitoring: Shows current battery charge level.

2.State of Health (SoH) Monitoring: Provides information about overall battery condition.

3. Fault Detection: Identifies and reports system faults.

4. Data Logging: Records operational data for review or maintenance.

CAUTION

Regular Checks: *Monitor your BMS regularly to ensure optimal performance and prevent unexpected power loss.*

CAUTION

System Isolation Before Maintenance: *Before performing any repairs or maintenance, turn off all equipment connected to the system. In addition, switch OFF the Power switch on the BMS to isolate the batteries from other electrical circuits. This ensures safe working conditions and prevents accidental damage or short circuits.*

WARNING

High Voltage Exposure: *Voltage is present at the battery terminals. Always use insulated tools and protective gloves when working on or near the battery system to prevent electrical shock.*

The NeverDie® BMS operates by monitoring voltage and temperature data from each individual cell and the battery pack as a whole.

Cell data is passed to the BMS via a unique single-wire interface called OptoLoop®. This interface allows for a flexible, distributed design for battery packs of various voltages and capacities.

NOTICE

OptoLoop® Function: *OptoLoop® works by establishing circuit continuity that passes through all individual BMS monitoring boards installed on each cell inside the battery modules.*

CAUTION

Fault Detection: *If continuity is broken by any cell board or wiring fault, the main BMS unit will open the main contactor and prevent it from closing until the fault is resolved. This protects the battery from potential damage.*

BMS OPERATION FLOWCHART

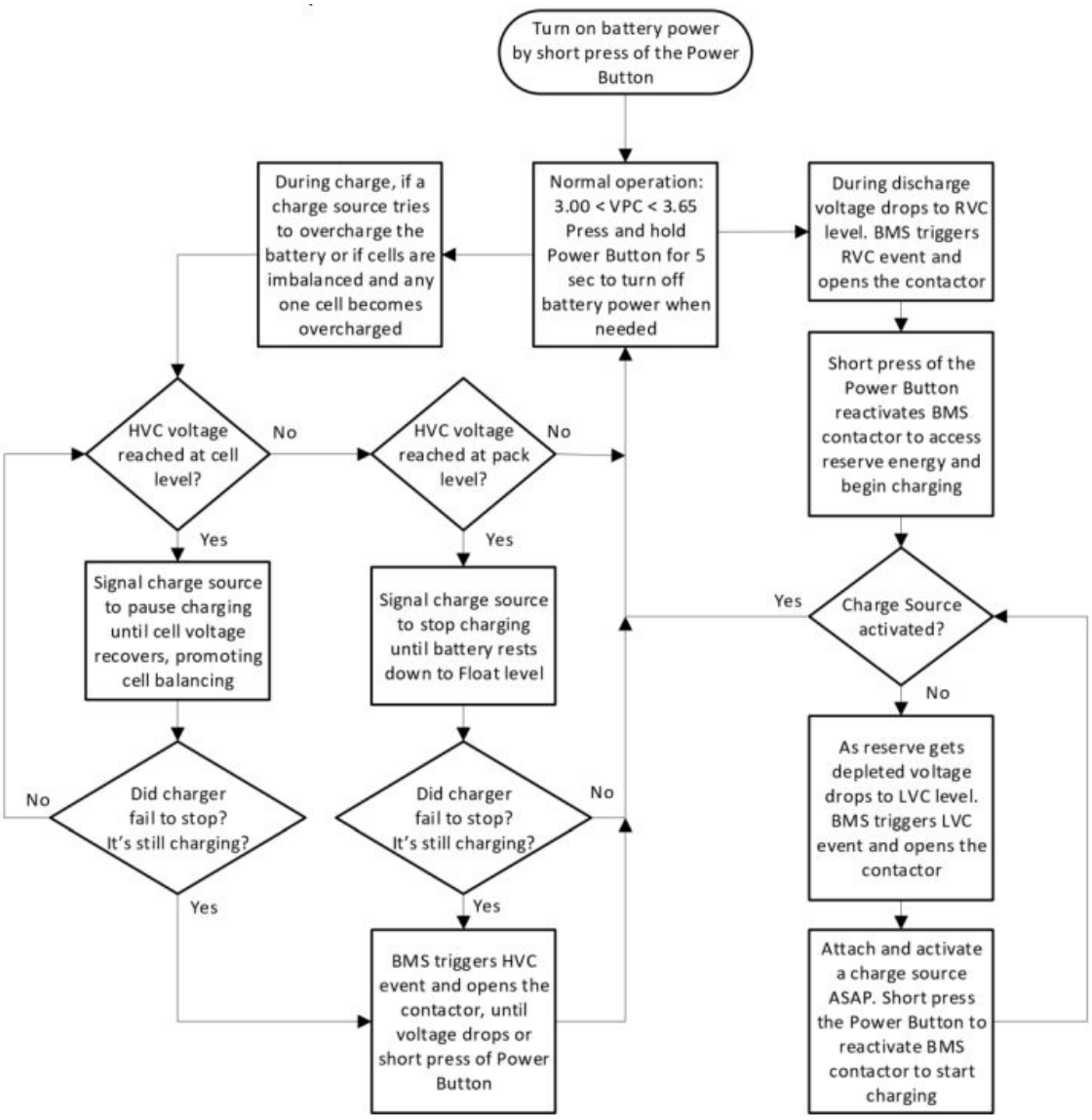

NOTICE

Normal Operation: *The NeverDie® BMS does not intervene if the battery is cycled normally.*

NOTICE

Low Voltage Shutdown: *If the battery voltage drops below the safe operating limit, the NeverDie® BMS will automatically shut down to protect the battery from deep discharge. Power output will be disconnected, and the LED indicator will turn red. To restore power, apply a charge source such as shore power or alternator charging, then press the BMS Power/Reset button once the voltage is above the recovery threshold.*

NOTICE

BMS LED Indicators: *Green: Normal operation. Amber: Warning or low charge. Red: Fault or protective shutdown. If the LED is off, the system is fully powered down or disconnected.*

NOTICE

BMS Reset and Recharging After Low Voltage: *After a low-voltage shutdown, connect the RV to shore power or start the engine to begin charging. When the battery voltage rises above the restart threshold, press the Power/Reset button on the BMS to restore normal operation. Verify charging status on the Garmin SERV+ Power & Energy screen.*

CAUTION

Flowchart Limitations: *For simplicity, the flowchart only shows basic protective functions based on voltage triggers. Additional BMS functions based on temperature triggers and other advanced functions based on State of Charge (SOC) are not shown.*

INFO

Additional Information on Garmin Screens: *For detailed information on all Garmin control system screens, including Power & Energy, inverter control, and power management functions, refer to the Garmin SERV+ control system interface documentation.*

INTEGRATION WITH GARMIN SERV+

The BMS Power/Reset switch is located directly on the main Lithionics® battery housing. This switch serves three functions: turning the BMS ON, turning it OFF, and resetting it after a protective shutdown. To reset the BMS, ensure that the RV is connected to a charge source (shore power or alternator).

Once voltage is above the recovery threshold, press and hold the Power/Reset button for approximately 3–5 seconds. The LED will change from red or amber to green, indicating that the system has been restored to normal operation.

Avoid pressing the switch repeatedly or holding it for extended periods, as this may trigger additional protective cycles.

KEY FUNCTIONS

- Protecting batteries from overcharge, over-discharge, and excessive temperature.
- Communicating battery status (state of charge, remaining energy, warnings) to Garmin SERV+
- Coordinating power distribution to appliances through power shed and inverter control.

BASIC OPERATION

1. Power ON/OFF:

- Press the BMS Power/On/Off/Reset button to turn the system on or off. LED indicator shows status: **Green:** Normal operation. **Amber/Red:** Fault, low battery, or protective shutdown.

2. Monitoring:

- The BMS continuously monitors battery parameters and can automatically disconnect loads if unsafe conditions are detected.

3. Integration with Garmin SERV+:

- Open the Garmin SERV+ app or touchscreen interface.
- The BMS communicates via the iONbus system. The Power & Energy screen displays:
  - Status of alternator, batteries, charger/inverter, and shore power input.
  - Charger/Inverter control (turn on/off inverter or charger).
  - Input current limits.
  - AC load and whether appliances such as AC compressor/heat pump, cooktop, or microwave are active.
- The screen also reflects power shed events, showing which loads are temporarily disabled to protect battery health.

4. Automatic Shutdown at Low Battery Charge:

- If battery SoC drops below critical threshold, the BMS automatically isolates the batteries to prevent damage.

5. Reset/Restart:

- To restore BMS operation after low battery shutdown, press the Power/Reset button and verify status on the Garmin SERV+ Power & Energy screen.
- In very low voltage conditions, the BMS may not reset immediately. In that case, allow at least 5–10 minutes of charging before pressing the Power/Reset button again.

POWER MANAGEMENT/POWER SHED

- The BMS works with Garmin SERV+ to shed non-essential loads if battery voltage is low or inverter limits are reached.
- Users can monitor and control which appliances are active through the Power & Energy screen.

FAULTS AND RESET

- If a fault occurs (overvoltage, undervoltage or a temperature warning), the BMS will automatically isolate the battery.
- To reset the system:
  1. Identify and correct the cause of the fault.
  2. Press the BMS Power/Reset button.
  3. Verify status on the Garmin SERV+ Power & Energy screen.

NOTICE

Check Monitoring: *All monitoring and fault notifications are available through Garmin SERV+; always check the app for warnings before operating heavy loads.*

NOTICE

LED Indicators: *LED status indicators on the BMS unit provide quick reference for normal operation or faults.*

DANGER

Do Not Override: *Never attempt to bypass or manually override the BMS unless following official procedures. Doing so can cause serious damage to the battery system or create electrical hazards.*

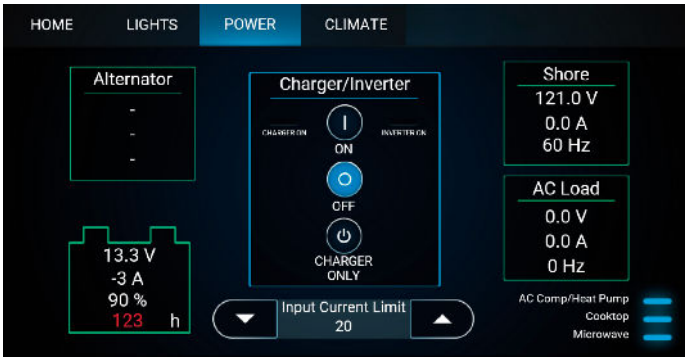

BMS OPERATION WHEN STORING VEHICLE

When a Grech RV is stored for an extended period, the NeverDie® BMS ensures that the house batteries (Lithionics 51V) remain within safe voltage and temperature limits.

This prevents over-discharge, battery degradation, and potential damage. Storage mode is managed automatically by the BMS and monitored through the Garmin SERV+ Power & Energy screen. This does not affect the chassis starter battery or Mercedes-Benz electrical systems.

NOTICE

RV House Battery Only: *The BMS storage mode applies only to the RV house batteries. It does not affect the chassis starter battery or Mercedes-Benz electrical systems.*

NOTICE

BMS Protection During Storage: *During long-term storage, the NeverDie® BMS if not turned off will automatically monitor battery voltage and temperature. If voltage drops too low, the BMS will shut down to protect the battery bank from deep discharge. This protection prevents battery damage and maintains a safe charge level without user intervention. It is recommended to turn off the BMS during long term storage to prevent battery discharge.*

NOTICE

BMS Operation in Winter or Cold Conditions: *The Lithionics® BMS is equipped with automatic cold-temperature protection and heating elements. When temperatures drop below 43°F (6°C), the internal heater activates to allow charging. Below -4°F (-20°C), charging is disabled until the internal temperature increases. During winter storage, ensure the RV remains connected to a low-current charge source (such as solar or inverter float) to maintain safe standby voltage. Do not attempt to charge a frozen battery; allow it to warm above freezing before recharging.*

PREPARING THE RV FOR STORAGE

Before placing the RV in storage, take steps to minimize battery drain and ensure the BMS can manage the system effectively. Proper preparation reduces the risk of deep discharge and keeps the batteries ready for use when the RV is returned to service. Key steps include:

- Fully charge the house batteries before storage
- Disconnect all non-essential appliances, including the microwave, cooktop, air conditioning, and other high-power loads.
- Verify battery voltage, state of charge (SOC), and any active alerts using the Garmin SERV+ Power & Energy screen.

NOTICE

Monitor with Garmin: *Always check battery voltage, SOC, and alerts using the Garmin SERV+ Power & Energy screen before storage.*

CAUTION

Disconnect Loads: *Leaving high-power appliances connected during storage may cause unnecessary battery discharge and reduce battery life.*

HOW BMS PROTECTS BATTERIES DURING STORAGE

Once the RV is prepared for storage, the BMS automatically applies protections to preserve battery health. It monitors voltage and temperature, disconnects non-essential loads if necessary, and manages charging from solar, inverter, or alternator systems. These protections are applied automatically without any manual activation required by the user. Main points include:

- Automatic monitoring of battery voltage and temperature.
- Disconnection of non-essential loads if voltage drops below safe thresholds.
- Managed charging from solar panels, inverter, or alternator to maintain optimal battery health.

NOTICE

Automatic Protection: *The BMS automatically protects the batteries; no manual activation is required for storage mode.*

CAUTION

Avoid Deep Discharge: *Do not leave loads connected during storage that could override BMS protections.*

DANGER

Do Not Bypass BMS: *Never attempt to bypass or manually override the BMS. Doing so can cause serious battery damage or electrical hazards.*

MAINTENANCE DURING STORAGE

Even during storage, periodic checks are recommended to ensure the BMS is functioning correctly and the batteries remain in good condition.

- Periodically check battery voltage and alerts on the Garmin SERV+ Power & Energy screen.
- For storage longer than three months, consider a slow top-up charge via solar panels or the inverter to prevent deep discharge.

NOTICE

Periodic Monitoring: *Regularly verify battery health using Garmin SERV+ to ensure storage protections are effective.*

CAUTION

Long-Term Storage: *For storage exceeding three months, a slow top-up charge is recommended to prevent deep discharge.*

SYSTEM COMPONENTS

The Battery Management System (BMS) works in coordination with several onboard components to monitor, protect, and optimize the performance of the 51V Lithionics® battery system.

Garmin® SERV+™ House Control System:

- This advanced control system replaces the previous Firefly interface.
- It offers centralized control of vehicle systems through an onboard touchscreen and Bluetooth®/Wi-Fi connectivity.
- Use your smartphone or tablet to monitor battery status, inverter performance, and system settings.

Grech Connect™ Wi-Fi Remote Diagnostics:

- Enables live monitoring of the BMS and remote diagnostics via Wi-Fi.
- This platform allows Grech RV technicians to access system data for support, ensuring efficient troubleshooting wherever you are.

Lithionics® 51V Lithium-Ion Battery System:

- The 51V battery pack is UL 1973 Certified and features NeverDie® Battery Management Technology.
- It includes a built-in Power Reserve to prevent deep discharge damage, and advanced iONbus® communication for accurate system monitoring.
- State of Charge (SOC), battery health, and cycle history can be viewed using the Lithionics® Bluetooth™ App.

ARCO Zeus™ Alternator and Regulator:

- A high-output alternator system capable of charging the house battery bank even at idle. The ARCO Zeus™ Bluetooth™ App displays charging status and alternator output in real time.

Victron Blue Power MultiPlus-II Inverter/Charger:

- A 3,000W smart inverter system that delivers seamless AC power while also functioning as a multi-stage battery charger.
- Monitor inverter performance and configure settings via the VictronConnect™ App.

Roof-Mounted Solar Panel System:

- Provides passive solar charging to the house battery system when exposed to direct sunlight, supporting energy independence during off-grid use.

Inline Chassis Battery Charger:

- Ensures the vehicle's chassis (starter) battery can be charged from either the house battery or shore power. This prevents critical system faults due to a depleted starter battery.

Starlink ROAM (Satellite Internet):

- Installed as a standard feature, the system supports reliable satellite internet connectivity (service required separately).

Fusion® Hideaway Audio System:

- A high-quality Bluetooth and Wi-Fi audio system with future upgrade potential via external ports.

CAUTION

Inverter Cooling and Ventilation: *Do not block ventilation around the inverter/charger or house battery compartment. Restricted airflow can lead to overheating and premature equipment failure.*

WARNING

Unauthorized Modifications: *Never attempt to bypass or rewire BMS components. Unauthorized changes may result in system instability, battery damage, or fire.*

DANGER

Risk of Electrical Shock or Fire: *All BMS components carry high-voltage circuits. Do not service or inspect electrical enclosures unless you are a qualified technician. Always disconnect all power sources before performing any maintenance.*

INFO

Refer to System Resources: *For detailed information on operating and monitoring the Battery Management System (BMS), including Garmin SERV+ control functions, Lithionics® battery data, Victron inverter settings, and ARCO Zeus alternator diagnostics, refer to the user guides for each integrated component and the Grech Connect™ support platform.*

LITHIONICS® 51V BATTERY SYSTEM

The house battery system in your vehicle consists of a high-capacity Lithionics® 51V lithium-ion battery bank featuring NeverDie® Battery Management Technology and iONbus® smart communication. This setup is designed to deliver superior runtime, safety, and diagnostic capabilities compared to traditional 12V or generator-based systems.

The system provides approximately 16,896Wh (Watt Hours) of total energy storage. This capacity allows extended off-grid operation, including up to 12 hours of air conditioning runtime on battery power alone (conditions vary based on usage, climate, and charge level).

CHARGING SOURCES

The battery system can be recharged through multiple sources, all managed automatically by the BMS:

ARCO Zeus™ Alternator:

- Charges the battery while driving or idling, with real-time performance visible in the Zeus™ Bluetooth App.

Victron MultiPlus-II Smart Inverter/Charger:

- Charges the battery when shore power is connected, providing fast, multi-stage recharging while simultaneously powering 120V systems.

Roof-Mounted Solar Panel System:

- Provides supplemental charging from sunlight, helping maintain charge levels during storage or off-grid use.

Inline Chassis Battery Charger:

- Allows the house battery system to maintain the Mercedes-Benz chassis (starter) battery, preventing low-voltage faults.

This intelligent charging system setup helps ensure optimal battery health, longer lifespan, and continuous power availability during travel or while stationary.

FEATURES AND CONSTRUCTION

Safe, Non-Toxic Lithium Iron Phosphate Cells:

- Provide enhanced thermal and chemical stability.

NeverDie® External Battery Management System:

- Maximizes battery lifespan, monitors performance, and prevents deep discharge damage.

Aluminum Alloy Enclosure:

- Fire and crush tested Aluminum Alloy Enclosure meeting the UL 1973 certification.

Advanced iONbus® Communication:

- Enables smart monitoring and seamless integration with Grech Connect™, Garmin SERV+™, and other vehicle systems.

Internal 70W Heater:

- Automatically activates below 43°F (6°C) and BMS must be ON to allow safe charging in cold environments (down to -4°F / -20°C).

High Current Capability:

- Supports a maximum charge and discharge current of 160A with a pulse current capacity of 1,600A for 1 second.

Bluetooth Connectivity:

- Real-time diagnostics and monitoring through the Lithionics Battery® Monitor App (available for iOS and Android).

Robust Mechanical Design:

- Dimensions of 26.2" x 8.5" x 11.0" (665.5mm x 215.9mm x 279.4mm) and weight approx. 132 lbs (59.9 kg). Mount upright only (black lid facing up).

ELECTRICAL SPECIFICATIONS	
Parameter	**Specification**
Nominal Voltage	51.2 V
Nominal Capacity	165 Ah per module
Total Energy Storage	8,448 Wh per module
Max Continuous Discharge	<160 A
Recommended Discharge	<82.5 A
Pulse Discharge Current (1s)	<1,600 A
Operating Temperature Range	32°F to 140°F (0°C to 60°C)
Charge Voltage	57.6 V ± 0.8 V
Float Voltage	54.4 V ± 0.8 V
Low Voltage Cut-Off	46.4 V ± 0.8 V
Internal Resistance	<6 mΩ

USING THE LITHIONICS BATTERY® MONITOR APP

Lithionics Battery® has developed the Lithionics Battery® Monitor app for iOS and Android mobile platforms, which displays real time battery information

Battery must be turned on via the Power button before the Bluetooth connection can be made. When the battery is turned off, Bluetooth is also powered off to save energy.

This app can be downloaded for free at the Apple App Store or the Google Play Store for your iOS or Android device.

To connect Bluetooth:

1. The battery must be in the ON position
2. Bluetooth must be enabled on your device
3. Open the Lithionics Battery® Monitor App and accept location permissions.
4. Under the Device List, select the battery you would like to monitor (the device name is identified by the battery serial number)

Successful Bluetooth Connection

Once the connection is successful, the Battery Info screen automatically displays. This screen provides useful information such as the battery state-of-charge percentage, voltage, current, power, internal cell temperature, BMS temperature, power state and estimated time remaining.

- The red color of the Current, Power and Time Remaining indicates that battery is being discharged.
- The green color of the same values indicates that battery is charging, with "+" sign added to the Current for additional indication of charging.
- The green or red coloring of the Voltage, Temperature and State values indicates normal (green) or abnormal (red) operational range, such as low/high voltage or low/high temperature.

STATUS CODE READER

On the Battery Info screen, tap on the Status Code at the bottom right and it will automatically open the Status Code reader screen.

The Status Code Reader screen of the app makes it easy to visualize the status by observing the color-coded table.

Each active description is color coded in green or red, where green indicates normal conditions and red indicates faults or critical conditions requiring attention, such as immediate need to charge the battery.

Other important features in the app are BMS Firmware Update, Data Logging, Bluetooth Security PIN, Custom Battery Name, etc. These features can be accessed via the Settings screen, by touching the gear icon in the upper right corner of the main screen.

CAUTION

Power Shutdown Before Service: *Always turn off equipment connected to the system in addition to turning OFF the Power switch provided on the system to isolate the batteries from other electrical circuits, before performing any repairs or maintenance on the system.*

INFO

See Support Resources: *For detailed guidance on using the Lithionics Battery® Monitor App, including setup, status indicators, and diagnostic features, refer to video tutorials available on the Lithionics YouTube channel.*
Contact Lithionics® technical support or your Grech RV service provider if uncertain about storage or battery condition.

BATTERY STORAGE PROCEDURE

Before placing your vehicle in storage or leaving it unused for an extended period (more than 2 weeks), it is essential to prepare the Lithionics® battery system correctly to prevent discharge, degradation, or damage.

RECOMMENDED STORAGE CONDITIONS:

- **State of Charge (SoC):** Store batteries at 50–70% charge to preserve battery health and prevent deep discharge.
- **Temperature Range:** Store in a cool, dry place between 32°F to 77°F (0°C to 25°C). Avoid freezing or excessive heat.
- **Avoid Long-Term Full Charge or Full Discharge:** Storing fully charged or fully discharged batteries for extended periods can reduce lifespan.

Preparation of Storage

- Turn off all major 12V and 120V loads, including the inverter, lighting, air conditioning, and any powered accessories.
- Disconnect shore power and disable solar charging via the Garmin Power Distribution Screen.
- Turn OFF the BMS and, if the vehicle or system will be stored for several months, disconnect the house battery.

During Storage

- Monitor battery voltage monthly using the Lithionics Battery® Monitor App to ensure SoC remains in the recommended range.
- Recharge the battery to 50–70% if the voltage drops below safe levels (approximately 50% SoC) to avoid deep discharge damage.
- If ambient temperatures fall below freezing, rely on the internal 70W heater (only operates with BMS ON) to maintain safe battery temperature during storage.

Turn OFF the Battery System

- After fully charging the batteries and disconnecting all loads, turn OFF the battery system via the switch on the BMS. This prevents unnecessary discharge during long-term storage.

Before Returning to Use

- Fully charge the battery bank before normal operation.
- Perform a system check using the Lithionics Bluetooth® Monitor App to review battery health and status.
- Ensure all connected charging systems (ARCO Zeus alternator, Victron inverter/charger, solar) are functioning properly.

Restarting After Storage

To resume vehicle use:

- Reconnect shore power or enable solar charging.
- Turn the battery system ON via switch or BMS.
- Verify battery state of charge is above 80%.
- Power on vehicle systems through the Garmin Control Screen.

CAUTION

Do Not Store Battery in Depleted State: *Storing the battery system at a low state of charge can cause irreversible cell damage and may void battery warranty coverage.*

CAUTION

Incomplete System Boot: *Do not operate major appliances or attempt to start HVAC systems until the battery system has fully initialized and the Garmin Control Screen confirms operational status. Doing so may cause temporary faults or improper function.*

WARNING

Monitor Battery Status Remotely: *Periodically check battery health and voltage. Recharge if the state of charge falls below 50% during storage via Garmin Connect or Lithionics Bluetooth.*

WARNING

Electrical Load Surge Risk: *Always reconnect power sources (shore or solar) before powering ON the battery system. Activating systems without charging input may result in rapid voltage drop or battery over-discharge under heavy load.*

DANGER

Do Not Attempt Service on High-Voltage Battery: *The Lithionics® 51V battery system operates at high voltage and includes internal safety mechanisms. Do not open, tamper with, or service the battery unit. Contact Grech RV or Lithionics technical support for service instructions.*

DANGER

Fire or Shock Hazard: *Never attempt to reconnect or activate the battery system if wires, battery terminals, or fuses appear damaged, corroded, or wet. Doing so may result in serious injury, fire, or electrical shock. Contact a qualified technician for inspection.*

DISCONNECTING STARTER BATTERY

If your vehicle will be stored for an extended period, such as more than four weeks, it is recommended to disconnect the starter (chassis) battery to prevent power drain and damage to electrical systems.

BATTERY DISCONNECT LOCATION

The chassis (starter) battery disconnect is located to the right of the accelerator pedal, in the lower section of the driver's footwell area, near the center console of the Sprinter.

To access the disconnect:

- Locate the plastic access cover next to the pedals.
- Pull the cover upward and outward to remove it. No tools are required.
- The quick-disconnect switch will now be visible behind the cover.

USING THE QUICK-DISCONNECT SWITCH

Sprinter models are equipped with a factory-installed quick-disconnect plug that allows safe and convenient isolation of the starter battery without removing the battery terminals. This is the preferred method when the vehicle is placed in storage or undergoing service.

1. Ensure the vehicle ignition is completely OFF, and wait at least 15–20 minutes before disconnecting. This allows all electronic modules to shut down completely and prevents triggering a Check Engine Light or electronic fault.

2. Remove the access cover to the right of the pedals, below the steering wheel and near the center console area, by pulling it up and outward.

3. Locate the quick-disconnect plug. On top of the plug is a red locking tab.

4. To disconnect the battery, press down on the red tab and pull the plug straight out from the ground (earth) pin. This interrupts the connection between the starter battery and the vehicle's electrical system.

5. To reconnect the battery, push the plug back onto the ground pin until a click is heard. The red tab will automatically lock into place. Do not push the tab in while reconnecting—just slide the connector until it clicks securely.

NOTICE

Vehicle Storage: *For long-term storage, disconnecting the starter battery prevents gradual discharge and helps maintain battery health.*

CAUTION

Wait Before Disconnecting *Always wait at least 15 to 20 minutes after switching off the ignition before disconnecting. Disconnecting too soon may interrupt control module communication and trigger a Check Engine Light or other fault codes.*

WARNING

Avoid Short Circuits: *Never disconnect the positive terminal first. Always disconnect the negative (ground) side using the quick-disconnect or during service. Improper handling may cause sparks or electrical system damage.*

DANGER

Risk of Electric Shock or Injury: *Battery terminals carry high current. Use only insulated tools and avoid wearing metallic objects such as watches or jewelry when working near the battery. Always ensure the ignition is OFF before performing any disconnection or reconnection.*

INFO

Refer to Sprinter Manual: *For complete instructions on proper starter battery disconnection and reconnection during long-term storage, consult the Mercedes-Benz Sprinter Operator's Manual.*

VICTRON MULTIPLUS-II INVERTER/CHARGER

The Victron MultiPlus-II 3000 W is the RV's primary inverter and battery charger, forming a key component of the GRECH POWER™ system. It converts DC energy from the house batteries into AC power for onboard outlets and appliances, and also manages battery charging when connected to shore power.

FUNCTION AND OPERATION

- **Inverter Mode:** Converts 51 V DC from the house Lithionics batteries into 110 V AC to power interior outlets, appliances, and electronics.
- **Charger Mode:** When the RV is connected to shore power via the Smart Plug, the Victron MultiPlus-II charges the house batteries and maintains system voltage.
- **Integration:** Works in combination with:
  - ARCO Zeus alternator for charging while driving
  - Solar panels for off-grid energy
  - Garmin Control System and VictronConnect app for monitoring battery levels, input/output power, and system status

NOTICE

Continuous Operation: *The Victron system automatically switches between inverter and charger modes as needed, providing seamless AC power to the RV.*

MONITORING AND CONTROL

The system can be monitored via VictronConnect, providing information on:

- AC input and output
- Battery voltage and charge current
- Power consumption and shore power usage

The Garmin touchscreen shows high-level status including shore power connection, battery levels, and warnings from the Victron system.

NOTICE

User Interface: *The Victron operates automatically; no manual switching is required for normal use.*

MAINTENANCE TIPS

- Keep the inverter/charger clean and free of dust.
- Inspect connections and fuses regularly.
- Do not block cooling vents or install near flammable materials.

NOTICE

Monitoring: *Regularly check battery levels and power readings on Garmin or VictronConnect to ensure proper system function.*

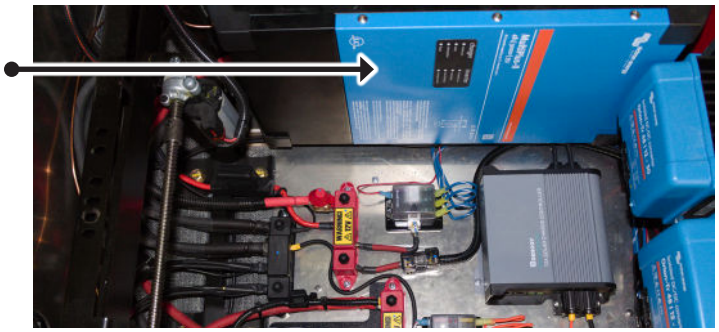

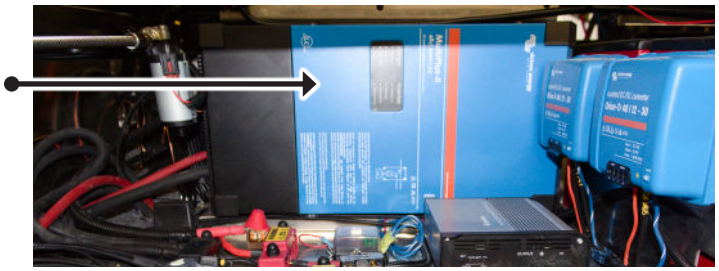

CAUTION

Maximum Load: *Avoid operating appliances that exceed the inverter's 3000 W capacity.*

CAUTION

Proper Ventilation: *Ensure the inverter/charger has adequate airflow to prevent overheating.*

WARNING

Do Not Modify: *Do not attempt to bypass or modify connections; the system is integrated for safe operation.*

DANGER

Electric Shock: *The inverter handles high-voltage AC and DC circuits. Only qualified personnel should service it.*

DANGER

Fire Hazard: *Overloading, short circuits, or damaged wiring can cause fire. Always follow system ratings and maintenance instructions.*

INTEGRATION AND CONTROL VIA GARMIN TOUCHSCREEN

The Victron MultiPlus-II inverter/charger can be monitored and partially controlled via the Garmin SERV+ touchscreen interface, providing a centralized interface for power management and monitoring.

This integration allows users to manage the inverter/charger safely without manually interacting with the Victron unit.

Overview:

- Displays system status including shore power connection, AC load, battery voltage, charging state, and warnings.
- Provides real-time feedback for power distribution and battery charging priorities.
- Shows whether the inverter is currently ON or OFF and if the unit is in charging or inverting mode.

NOTICE

Centralized Operation: *This integration allows seamless operation of the inverter/charger without manually interacting with the Victron unit.*

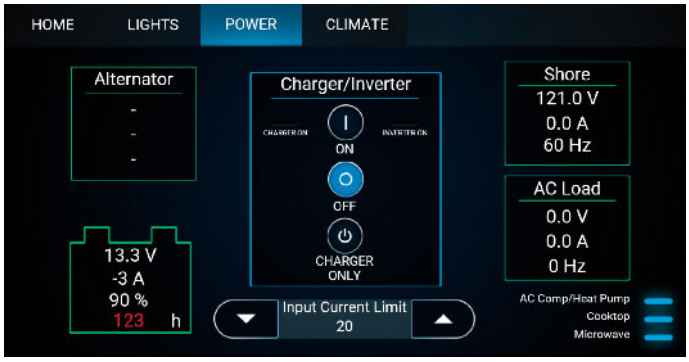

Inverter/Charger Control:

- Turn the inverter ON/OFF directly from the Garmin touchscreen using the Power & Energy screen controls.
- Select "Charger Only" mode when shore power is available and inverter output is not required.
- Manage charge priorities for the house batteries when connected to shore power or other charging sources.
- The system automatically switches between inverter and charger modes depending on power availability and battery state.

CAUTION

Safe Control: *Always confirm that loads are within the inverter's 3000 W capacity before enabling inverter output to prevent overload.*

WARNING

Load Coordination: *Do not manually switch the inverter on/off if the system indicates critical battery or load warnings; allow the Garmin interface and BMS to manage power automatically.*

Settings:

Adjust input current limits for shore power.

- Monitor AC loads to prevent exceeding inverter limits.
- View which appliances are active or temporarily shed for power management.
- Settings on the Garmin screen allow adjustment of the maximum shore current draw (e.g., 15A, 20A, 30A), which directly controls charging speed and prevents overloading campground power.

NOTICE

Input Settings: *Changing input current limits affects charging speed; ensure settings match shore power capability.*

CAUTION

Proper Settings: *Incorrect adjustments can trigger overload warnings or reduce battery life.*

Power Management Coordination:

- The Garmin interface reflects load shedding events initiated by the BMS and Victron system to maintain battery health.

NOTICE

Load Shedding Visibility: *All active load shedding events are visible on the Garmin touchscreen for immediate awareness.*

Monitoring Alerts:

- All warnings or abnormal conditions from the inverter/charger are displayed on the Garmin touchscreen for immediate awareness.
- Alerts include overload, overtemperature, shore power input errors, or inverter shutdowns.

NOTICE

Reference Screen: *For more detailed information about the Power & Energy display and inverter settings, refer to Screen 4: Power & Energy in the Garmin Control System section of this manual.*

INFO

Refer to Component Manual: *For detailed operating instructions, settings, and monitoring of the Victron MultiPlus-II inverter/charger, consult the official Victron MultiPlus-II Owner's Manual. For controlling the inverter via the Garmin touchscreen, see Screen 4: Power & Energy in this Grech RV Owner's Manual.*

ELECTRICAL POWER PROTECTION

Your RV is equipped with systems to manage, protect, and safely distribute electrical power, including a heavy-duty single-circuit Inverter Service Disconnect switch and other integrated safety systems.

These components work together to ensure reliable operation whether the RV is connected to shore power or running off the house batteries.

INVERTER SERVICE DISCONNECT SWITCH

The Service Disconnect switch allows users to manually isolate the RV's house battery from the inverter electrical system.

LOCATION / ACCESS

The Inverter Disconnect switch is located in the rear compartment of the RV, accessible through the rear doors below the sofa bed.

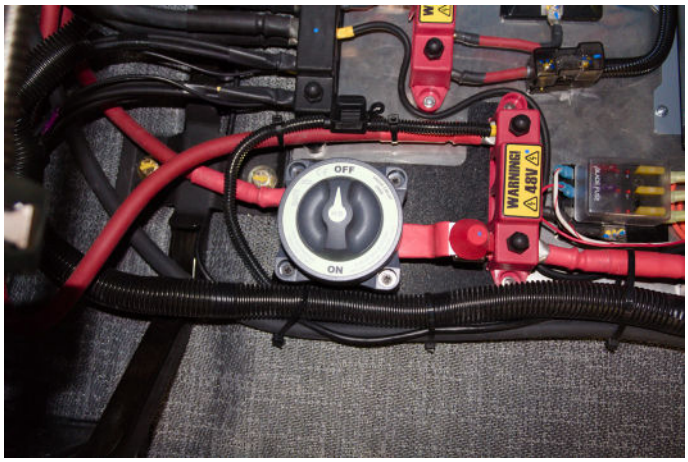

PURPOSE AND FUNCTION

The switch provides a simple ON/OFF method to control the connection between the house battery and the inverter/charger DC electrical system.

- **ON position:** Connects the house battery system to the inverter/charger DC electrical system, enabling normal operation of the inverter/charger.
- **OFF position:** Disconnects the house battery system from the inverter/charger DC electrical system, preventing any inverter load from drawing power from the house batteries.

NOTICE

Off Position: *In the off position the inverter/charger will not function or charge the house batteries from shore power.*

OPERATION INSTRUCTIONS

Turning ON the Inverter Disconnect Switch:

1. Rotate the switch handle to the ON position.

2. This connects the house battery to the Inverter.

Turning OFF the Inverter Disconnect Switch:

1. Ensure inverter and appliances are turned off and shore power is disconnected.

2. Rotate the switch handle to the OFF position.

3. This isolates the house battery from the inverter.

NOTICE

Inverter Service Disconnect Switch Does Not Disable House Loads: *This switch does not turn off the house battery loads for storage.*

NOTICE

Handle Position Indicator: *The switch handle position clearly indicates the battery connection status:*
- **ON:** *Connected, power available to the inverter*
- **OFF:** *Disconnected, battery isolated from the inverter.*

CAUTION

Avoid Operating Under Load: *Do not operate the switch while high-current devices are active.*

CAUTION

Confirm Handle Position: *Always confirm that the switch handle is fully in the ON or OFF position.*

CAUTION

Full Isolation Only: *Avoid using the switch to "soft switch" devices; it is meant for full isolation only.*

WARNING

Immediate Isolation: *In case of inverter electrical fault, rotate the switch OFF to isolate the inverter from the house battery.*

DANGER

Never Bypass: *Never bypass the switch or connect tools between terminals, as this can result in sparks, fire, or serious injury.*

POWER MANAGEMENT SYSTEM

Your RV is equipped with systems to manage, protect, and safely distribute electrical power, including an automatic transfer switch (ATS) combined with integrated surge protection.

These components work together to ensure reliable operation whether the RV is connected to shore power or running off the house batteries.

AUTOMATIC TRANSFER SWITCH

PROTECTION FUNCTIONS OF THE ATS

The ATS continuously monitors the AC input and manages seamless switching between shore power and the inverter. When shore power is connected, AC power operates appliances and charges the house batteries. If shore power is lost or disconnected, the system automatically switches to the inverter, drawing energy from the house batteries.

Missing Ground:

- The ATS detects an open or faulty chassis ground. If a missing ground is detected, the switch will prevent power transfer, protecting the RV and occupants from potential electric shock.

Incorrect Voltage Protection:

- The ATS checks that incoming voltage is within safe limits. If the voltage is too high or too low, the ATS will block the transfer, preventing damage to appliances and the electrical system.

Reverse Polarity:

- The system identifies reversed hot and neutral wiring and will not transfer power until the wiring is corrected, avoiding potential damage or hazards.

Voltage Surge Protection:

- The ATS includes integrated surge protection to safeguard against sudden spikes in voltage caused by lightning, grid switching, or other transient events.

Low Voltage Shutdown:

- If the incoming voltage falls below a safe threshold, the ATS disconnects the load to prevent the operation of appliances under unsafe conditions.

NOTICE

Automatic Operation: *The ATS functions without manual intervention, providing seamless source selection.*

NOTICE

Monitoring & Delay: *After a fault is corrected, the ATS may implement a short delay before reconnecting the load, allowing the electrical conditions to stabilize.*

DANGER

Electrical Shock Risk (Danger): *Do not bypass or tamper with the transfer switch. Improper handling can cause serious injury or damage to the RV electrical system.*

SURGE PROTECTION

The integrated surge protection safeguards the RV from electrical surges, overvoltage, undervoltage, reverse polarity, low voltage, missing ground, and other harmful fluctuations on shore power.

NOTICE

Continuous Protection: *Always keep the surge protection connected when using shore power to safeguard the RV's electrical systems.*

CAUTION

Power Source Check: *Verify that the shore power source is compatible (30 A, 120 V) before connecting.*

WARNING

Electronics Protection: *Never use shore power without the surge protection properly installed.*

DANGER

Fire/Electrical Risk: *Bypassing or disconnecting the surge protection while the RV is powered can cause fire, shock, or damage to electronics.*

GARMIN SYSTEM INTEGRATION

Garmin offers a fully integrated monitoring system for recreational vehicles (RVs), enhancing the user experience with centralized automation, reliability, and smart connectivity. This system is built around the EmpirBus digital switching technology, allowing streamlined management of all onboard systems from a single interface.

This modular system is custom configured by Grech RV to suit the layout and feature of the vehicle. The user can operate most systems directly from the Garmin touchscreen interface.

This high-resolution 7-inch touchscreen provides intuitive access to RV systems and components, including water supply, HVAC, battery levels, tank levels, and more.

MAIN COMPONENTS

1. EmpirBus Connect-50:

- The EmpirBus Connect-50 acts as a powerful and flexible interface module, enabling seamless communication between digital devices and Garmin's control network.
- It supports multiple input/output configurations and is ideal for integrating third-party components with the Garmin ecosystem.

2. EmpirBus NXT DCM (DC Module)

- This digital control module is responsible for managing DC power distribution throughout the RV.
- The NXT DCM supports programmable logic, allowing custom switching scenarios, remote diagnostics, and improved energy efficiency.
- It is powered via the RV's DC electrical system.

3. Garmin Touchscreen Panels

- Garmin touchscreen display provides a user-friendly interface which offers an intuitive way to interact with key RV systems and components, including seating adjustments, awning extension and retraction, battery status, lighting, audio settings, tank levels, charger/inverter operation, alternator status, climate settings, and blind positioning- all conveniently available from a single, centralized display.
- This high-resolution panel is conveniently installed near the entry door, providing easy access as you enter or exit the vehicle.

INFO

Refer to Garmin Serv+ Owner's Manual: *For additional details regarding touchscreen functionality, system features, and remote diagnostics, please consult the Garmin Serv+ Owner's Manual.*

4. Garmin Serv+

- Garmin Serv+ offers remote support, diagnostics, and firmware updates, ensuring that your RV's electronic systems are always up to date and functioning correctly.
- This service reduces downtime and improves long-term reliability through real-time data access and support.

NOTICE

Technician-Only Access: *Garmin Serv+ is not a touch screen or user-facing device. It is a background cloud-based service used by certified technicians for diagnostics, software updates and remote system support.*

KEY BENEFITS

- Centralized system monitoring and control.
- Customizable interfaces for various RV configurations.
- Reduced wiring complexity via digital switching.
- Remote diagnostics and updates through Garmin Serv+.
- The system can be expanded with extra sensors and modules if needed.
- Minimal maintenance- firmware updated handled through Serv+.
- Simple, intuitive control via touch screen interface.

SYSTEM USE AND MAINTENANCE

The Garmin system is designed for easy day-to-day use via the installed touchscreen panels. These panels provide access to nearly all system functions in real time. No regular maintenance is required by the user; however, it is recommended to allow firmware updates when prompted, which may be handled remotely via Garmin Serv+.

System settings, screen layouts and control logic are previously configured by an authorized technician. Any customizations or advanced changes should be performed only by certified service personnel.

NOTICE

Qualified Personnel Required: *Only qualified service personnel should perform wiring changes, software updates, or module replacements.*

CAUTION

Screen Cleaning: *Use only a soft, dry cloth to clean the Garmin touchscreen. Avoid moisture, alcohol, or abrasive materials to prevent screen damage.*

CAUTION

Power Off for Service: *Ensure all power to the system is turned off before performing any service on wiring or modules.*

CAUTION

Startup Delay: *Allow system boot and screen initialization to complete fully before interacting with any functions. Rapid inputs during startup may not be registered properly.*

CAUTION

Touchscreen Care: *Avoid using sharp objects or excessive pressure on the touchscreen panel to prevent permanent damage.*

CAUTION

Moisture Control: *Keep the area around the touchscreen panel clean and free of moisture to maintain reliable operation.*

WARNING

Do Not Modify System: *Do not attempt to modify or reprogram the Garmin system components yourself. Unauthorized changes can lead to system malfunctions or loss of functionality.*

Electrical components such as the EmpirBus NXT DCM must only be serviced by qualified technicians. Mishandling high-current connections may result in personal injury or equipment damage.

DANGER

High Voltage Hazard: *Risk of electric shock or fire. Do not open, disassemble, or tamper with power modules such as the EmpirBus Connect-50 or NXT DCM. These components are part of the RV's electrical system and must only be accessed by trained personnel.*

DANGER

Do Not Bypass Safeguards: *Do not bypass safety fuses or wiring protections in the digital switching system. Doing so may void warranties and create fire hazards.*

GARMIN SERV+ HOUSE CONTROL SYSTEM

The Garmin SERV+ system is part of the Battery Management System (BMS) in your vehicle. It provides centralized control of interior circuits and systems, wireless connectivity, screen configuration, and access to software updates. This section outlines its main features and configuration steps.

USING THE TOUCHSCREEN

- Tap the screen to select an item
- Drag or swipe your finger across the screen to pan or scroll
- Pinch two fingers together to zoom out
- Spread two fingers apart to zoom in

TURNING OFF THE DISPLAY

- Select ON/OFF icon to turn off the display
- Tap the screen to turn on the display

OPENING AN APP

- The home screen contains shortcuts for frequently used apps
- The app drawer contains all of the apps installed on your device
- Select an app shortcut from the home screen

SETUP USING STARLINK WI-FI ROUTER

1. Swipe up from the bottom of any screen to expose the navigation buttons

2. Tap the Back Arrow until the Settings icon (gear symbol) appears

3. Go to Settings > Vehicle Integration, then tap the IP Address field 11 times. Select I AGREE when prompted

4. Select Access Point Settings:
- Turn Access Point OFF
- Tap Save at the bottom
- Tap the Back Arrow

5. Select Ethernet:
- Verify the SERV is set to DHCP Client
  - Tap on the top line. (It could read DHCP Client, Static IP, or DHCP Server)
  - Select DHCP Client from the list
- Ensure Ethernet Bridging is set to OFF
- Scroll down and select Save

6. Tap the Back Arrow

7. Scroll down and select Restart

GARMIN SERV+ HOUSE CONTROL SYSTEM SPECS

Specification	Measurement
Temperature Range	From -10° to 55°C (from 14° to 131°F)
Input voltage	From 10 to 16 Vdc
Fuse	30 A
Memory card	1 microSD card slot; 2 TB max. card size
Wireless frequency and transmit power	2.4 GHz @ 14.3 dBm max.
Max. Wi-Fi connected devices	10
Standby current draw	200 mA
Output channels	6 high side PWM, 1 to 10A
Analog input voltage range	From 0 to 16 V +/- 1%2
Analog input resistance range	From 0 to 1500 ohm +/- 5%
Configurable I/O pin - max output current drive	50 mA
Digital input peak/average current (12 V)	170 mA/1 mA
Digital input weak signal low side/high side	1 mA/4 mA
Dimensions (W × H × D)	209.2 × 123.3 × 38.6 mm 8.24 × 4.85 × 1.52 in
Display size (W × H)	153.2 × 90.1 mm (6.03 × 3.55 in.)
Weight	438 g (1.00 lb.)
Typical current draw at 12 Vdc with all channels off	0.3 A
Max. current draw at 12 Vdc with all channels off	0.55 A
Max. current draw at 12 Vdc	30 A

WARNING

Refer to Product Safety Guide: *See the Important Safety and Product Information guide included in the product box for product warnings and other critical information.*

NOTICE

Garmin Support Availability: *If functionality issues persist, Garmin product support is available via phone or email. Support is provided only when the vehicle is in the possession of the authorized dealership or customer. Garmin will offer technical assistance and operational guidance based on the information provided, and will support manufacturing defects, including necessary replacement parts for authorized dealerships and customers.*

DIGITAL SWITCHING

Your Garmin SERV switching display can be used to monitor and control circuits using an EmpirBus™ digital switching system or another compatible digital switching system. For example, you may be able to control the interior lights in your RV.

OPENING THE DIGITAL SWITCHING CONTROLS

You can open the digital switching controls from the home screen by selecting **RV Controls.** A list of available RV controls appears when selecting the RV Controls option. Available controls may vary depending on the vehicle configuration.

SETTINGS

CONNECTING TO A WIRELESS NETWORK

To connect the system to a wireless network:

1. Tap Settings > Network & Internet > Wi-Fi
2. If needed, enable Wi-Fi using the toggle switch
3. Select a network from the list
4. Enter the encryption key if required

The device connects to the wireless network. The device remembers the network information and connects automatically when you return to this location in the future.

DISPLAY CONFIGURATION

Adjust screen appearance and user settings:

- To change display settings select Settings> Display:

Brightness Level:

- Sets the display brightness level on your device

Wallpaper Background:

- Sets the wallpaper background on your device

Screen Timeout:

- Sets the amount of idle time before the device follows the brightness level in the keep screen on setting

Keep Screen On:

- Sets the screen brightness after the timeout

Font Size:

- Increases or decreases the font size on your device

SETTING THE TEXT LANGUAGE

Adjusting system language and clock settings

- **Changing Language:** Select Settings > System > Language & Input > Languages
- **Changing Time and Time zone:** Settings> System >Date & Time. Use network-provided time, Set or adjust time zone and choose 24-hour or 12-hour format

VIEWING REGULATORY AND COMPLIANCE INFO

Locating e-labels and certifications

- Navigate to Settings > About Device > Regulatory Labels

RESETTING TO FACTORY DEFAULTS

Erase all data and restore original settings

To perform a full reset:

- Go to Settings > System > Reset Options > Erase all data (factory reset)

WARNING

Data Loss: *A factory reset will permanently erase all user data, settings, and preferences. Only proceed if necessary.*

UPDATING SOFTWARE USING WI-FI

You can update the software by connecting your device to a Wi-Fi network that provides access to the internet.

1. Wi-Fi Connection for Updates

- Connect the device to a Wi-Fi network.
- While connected to a Wi-Fi network, the device checks for available updates automatically and displays a notification when an update is available.

2. Accessing Software Updates

- Select Network Connection Icon> Software Updates
- The device displays available software updates. When an update is available, "Update available" appears and select download

3. Accept License Agreements

- If necessary, read the license agreements, and select "Accept all" to accept the agreements.

NOTICE

License Agreement Required: *If you do not agree with the license terms, you can select Reject. This stops the update process. You cannot install updates until you accept the license agreements*

4. Maintain Power and Wi-Fi Connection

- Keep the device connected to external power and within range of the Wi-Fi network until the update process is complete.

NOTICE

Data Charges May Apply: *Software updates may require the device to download large files. Regular data limits or charges from your internet service provider may apply. Contact your internet service provider for more information.*

CAUTION

Screen Cleaning: *Use only eyeglass lens cleaner safe for anti-reflective surfaces and a soft, lint-free cloth. Gently wipe the screen. Do not use ammonia-based cleaners, waxes, or abrasive materials, as these can damage the protective coating.*

GARMIN CONTROL SYSTEM SCREENS

This section provides an overview of the main Garmin touchscreen interface in your STRADA RV. Each screen displays key information and control options for various systems, allowing you to monitor and operate your vehicle's functions efficiently.

SCREEN 1: HOME

The HOME screen is the central hub for accessing and controlling major systems. From this screen, you can:

- Control driver-side (D/S) and passenger-side (P/S) ottomans and the rear sofa.
- Extend or retract the awning.
- Monitor tank levels for fresh water, gray water, and black water.
- Operate the water pump and tank heaters.
- Turn interior and exterior lights on or off.
- Check battery status

NOTICE

Central Hub: *The Home screen provides an overview of multiple systems. Use this screen to monitor status before operating individual functions.*

CAUTION

Avoid Simultaneous Operations: *Do not operate multiple powered furniture or awning functions at the same time to prevent motor or system overload.*

WARNING

Vehicle Stationary Only: *Always ensure the RV is parked before operating ottomans, sofa, or awning.*

DANGER

Pinch Risk: *Keep hands and body parts clear of moving furniture and awning during operation.*

SCREEN 2: LIGHTS

The LIGHTS screen provides detailed control over interior and exterior lighting:

- **Interior Lights:** Ceiling, ceiling accent, bathroom, accent, cabinet, reading, galley, and floor.
- **Exterior Lights:** Porch, awning, outside step, and compartment lights.
- All lights can be turned on or off individually or controlled as a group.

NOTICE

Individual Control: *Lights can be controlled individually or as a group for convenience. A slide bar is provided for dimming, allowing precise adjustment of light intensity.*

WARNING

Electrical Safety: *Do not attempt to modify the lighting circuits.*

DANGER

Shock Hazard: *Keep away from wet surfaces when operating switches to avoid electric shock.*

SCREEN 4: POWER ENERGY

The Power & Energy screen provides real-time monitoring and control of electrical systems:

- Displays status of the alternator, batteries, charger/inverter, and shore power input.
- **Charger/Inverter Control:** Turn on/off the inverter or just the charger.
- **Input Current Limit:** Set or view limits. Shows AC load and whether AC appliances such as AC compressor/heat pump, cooktop, or microwave are active.

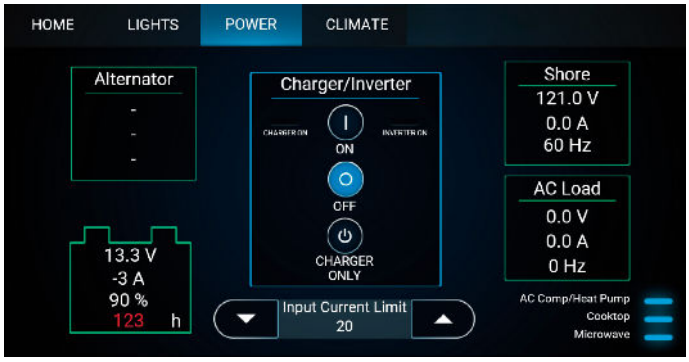

NOTICE

System Monitoring: *Check battery levels, AC load, and charger status regularly to ensure proper operation.*

WARNING

Overload Risk: *Avoid turning on high-power appliances simultaneously if house batteries or shore power are limited.*

DANGER

Electrical Shock/Fire: *Never tamper with the inverter, charger, or AC circuits; risk of severe injury or fire.*

SCREEN 5: CLIMATE

The Climate screen provides full control of the rear air conditioning and heating systems, as well as auxiliary comfort features

MAIN MODES

- **Off –** Shuts down the rear climate system.
- **Cool –** Activates the air conditioning for cooling.
- **Heat –** Activates heating mode.
- **Dry –** Dehumidifies the air.
- **Fan –** Circulates air without cooling or heating.

FAN MODE

- **Auto –** System automatically adjusts fan speed.
- **Low / Medium / High –** User-defined fan levels.

SET POINT ADJUSTMENT

Adjust the target cabin temperature using the Up/Down arrows to set the desired number in degrees (°F/°C).

TIMBERLINE INTEGRATION

- **Burner–** Toggles the Timberline diesel burner on/off
- **Electric–** Enables or disables the Timberline electric heating element.
- **Heater–** Activates/disables the Timberline heating system.
- **Hot Water Priority–** Assigns system energy to prioritize hot water production.
- **MaxxAir Fan–** Open/close the vent lid.
- **Fan Mode–** On/Off control for the MaxxAir fan motor.
- **Airflow Direction–** Choose between Air In (fresh air intake) or Air Out (exhaust).

EMPIRBUS® CONNECT-50 SYSTEM

The EmpirBus Connect-50 is a digital power distribution module used in your vehicle to manage electrical circuits with built-in diagnostics and manual override functionality. It allows for the resetting of fuses, manual control of individual outputs, and replacement of modules without reprogramming when applicable.

RESETTING A CHANNEL

To reset a specific channel to normal operating conditions:

1. Press Right Arrow button. The display will show SEL.
2. Use the Right Arrow to scroll to the desired channel.
3. Press the Reset/Auto button. The channel is not reset..
4. Press Left Arrow until SEL disappears from the display.

FUSE RESET ON A CONNECT 50

If a channel's fuse has tripped, it will be indicated by a continuous red channel indicator. To reset the channel to normal operation:

1. Press the Right Arrow. The display shows SEL.
2. Select the desired channel using the Right Arrow.
3. Press and hold Reset/Auto for 2 seconds.
4. Press the Left Arrow until SEL disappears.

MANUAL CHANNEL OVERRIDE (FAILSAFE MODE)

In the event of a communication (bus) failure or limp mode, each channel can be manually switched ON or OFF:

- A manually switched OFF channel is in normal running mode indicated by a flashing red light on the channel indicator.
- A manually switched ON channel is in normal running mode indicated by a flashing green light on the channel indicator.

To activate or deactivate a channel manually:

1. Press the Right Arrow. SEL will be shown in the display.
2. Use the Right Arrow to select the desired channel.
3. Press and hold MAN ON/MAN OFF for 2 seconds.
4. Press the Left Arrow until SEL in the display disappears.
5. Outputs switched off are not indicated with a flashing red led
6. To turn the switch on, follow steps 1–4 again.

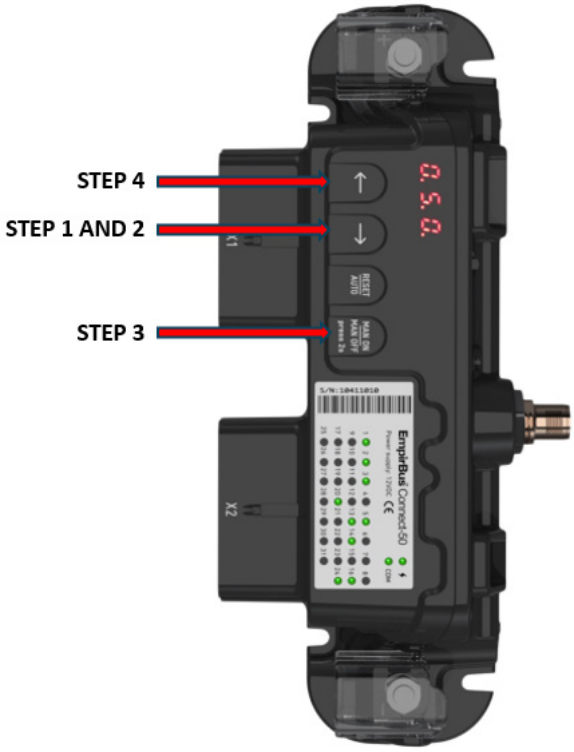

REPLACING A CONNECT-50 OR NXT MODULE IN THE FIELD

If a module (not the master) needs to be replaced, you may do so without re-uploading the configuration:

1. Press and hold the Reset/Auto button for 10 seconds or until BAS appears.
2. Press the MAN ON/MAN OFF button three times.
3. Use the arrow keys to match the module number shown on the LCD to the module's intended address.
4. Press and hold Reset/Auto again for 10 seconds to save the configuration.

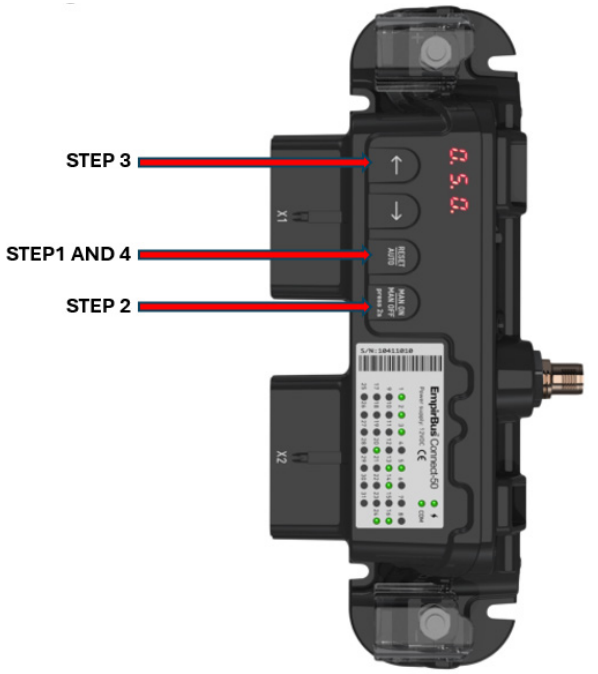

TROUBLESHOOTING AND ERROR CODES

The Connect-50 system and DCM modules are capable of reporting error codes to help diagnose electrical or communication issues. The table below provides a list of fault indicators and their recommended corrective actions:

DCM DISPLAY Note: The following is only valid if the display override is not engaged. In that case the configuration can choose to show "anything" on the display		
ERROR CODE DISPLAY	**EXPLANATION**	**ACTION**
ELH	Limp Home Mode engaged. Unit has no connection to the systems Master unit	Check the N2k network is terminated correctly, and power supply. Check the MCU has power, Check N2k cables.
H00	High Temperature warning	Check surrounding temperatures do not exceed operating temperature limits
H01	Temperature to high, Channel outputs are disabled	Check surrounding temperatures do not exceed operating temperature limits
Base Address flashes and all channel indicators are running red from left to right	Unit is currently being bootloaded, or failed last bootloading	Upgrade the firmware of the MCU
NORMAL INDICATORS	**EXPLANATION**	**ACTION**
uXX	Shown on power up. XX denotes software version. On power up if production -xxxx flags are set uXX is shown, then uXX is shown again	On Power up, uXXis shown
CUA	Controller unit is active	DCM is the systems master unit
C00	Configuration transfer in progress	The new configuration is being downloaded
C01	Configuration transfer completed	New configuration files download is complete

EMPIRBUS® MODULE CHANNEL GUIDE

The EmpirBus system organizes digital inputs and outputs into clearly assigned channels across multiple modules. Each channel controls or monitors a specific function—such as lighting, shades, pumps, or appliances—allowing precise management of vehicle systems. The channel assignments vary by module and are identified by user interface (UI) numbers, making it easier to reference, diagnose, or service individual functions within the Connect-50 platform.

MODULES

CONNECT 50-20 (UI:1)

- Manages core systems such as lighting, tank levels, pumps, appliance shedding relays, sofa motors, and ignition signal input.
- Most channels are linked to paired operations or sensors.

DCM-05 (UI:2)

- Primarily used for operating powered window shades, ottomans, and power screens.
- Each directional motion (up/down or extend/retract) typically uses a separate channel.

SERV 7+ (UI:3)

- Handles zones like ceiling, cabinet, porch, and awning lights.
- Frequently connected to the Garmin control interface for user input.

The CAN-bus system ensures all modules communicate digitally and reliably. If there's a malfunction or overload, fuses can be reset manually using the buttons and arrow functions directly on the Connect-50 module.

	Channel	Description / Function
Connect 50-20 (UI:1)	1	Tank Heater #1 (Linked w/Ch.2)
	2	Tank Heater #2 (Linked w/Ch.1)
	3	Awning Extend
	4	Awning Retract
	5	Reading Lights
	6	Stow/Away Mode - Switch Input
	7	**Blank**
	8	Interior Temp Sensor
	9	Accent Lights
	10	Compartment Lights
	11	D/S or P/S Mid Shade Down
	12	D/S or P/S Mid Shade Up
	13	Water Pump
	14	**Fresh Tank - Sender Input (SCAD)**
	15	**Grey Tank - Sender Input (SCAD)**
	16	**Black Tank - Sender Input (SCAD)**
	17	Sofa Up #1 (Linked w/ Ch.18)
	18	Sofa Up #2 (Linked w/ Ch.17)
	19	Sofa Down #1 (Linked w/ Ch.20)
	20	Sofa Down #2 (Linked w/ Ch.21)
	21	Floor Lights
	22	**Blank**
	23	RVC CAN HI
	24	RVC CAN Low
	25	Microwave Shed Relay
	26	Cooktop Shed Relay
	27	Bath Lights
	28	Outside Step Lights
	29	SCAD Sender Power Feed
	30	Ignition Signal
	31	
	32	Sensor ground

	Channel	Description / Function
DCM-05 (UI:2)	1	Power Screen Down
	2	Power Screen Up
	3	Slide Door Shade Up
	4	Slide Door Shade Down
	5	P/S Rear Shade Up
	6	P/S Rear Shade Down
	7	Rear Doors Shade Up
	8	D/S Ottoman Extend
	9	D/S Ottoman Retract
	10	D/S Front Shade Down
	11	D/S Front Shade Up
	12	Rear Door Shade Down
	13	D/S Rear Shade Up
	14	D/S Rear Shade Down
	15	P/S Ottoman Extend
	16	P/S Ottoman Retract

	Channel	Description / Function
SERV 7 + (UI:3)	1	**Ceiling Lights**
	2	**Awning Lights**
	3	**Ceiling Accent Lights**
	4	**Cabinet Lights**
	5	**Galley Lights**
	6	**Porch Lights**
	1	**Blank**
	2	**Blank**
	3	**Blank**
	4	**Blank**
	5	**Blank**
	6	**Blank**
	7	**Blank**
	8	**Blank**

NOTICE

Channel Usage and Importance: *Knowing which channel controls or monitors each function is essential for proper maintenance and quick identification of issues. Not all channels may be active or used in every vehicle model; some channels may be reserved for future upgrades or OEM customization.*

CAUTION

Channel Modification: *Incorrect modification or handling of channels can impact the electrical system's performance. Always consult qualified technicians or authorized service centers when working with EmpirBus systems. This channel guide serves as a reference for understanding system operations and aiding technical support.*

X1							
Ch 1	Ch 2	Ch 3	Ch 4	Ch 5	Ch 6	Ch 7	Ch 8
1	2	3	4	5	6	7	8
9	10	11	12	13	14	15	16
Ch 9	Ch 10	Ch 11	Ch 12	Ch 13	Ch 14	Ch 15	Ch 16

X2							
Ch 17	Ch 18	Ch 19	Ch 20	Ch 21	Ch 22	Ch 23	Ch 24
1	2	3	4	5	6	7	8
9	10	11	12	13	14	15	16
Ch 25	Ch 26	Ch 27	Ch 28	Ch 29	Ch 30	Ch 31	Sensor GND

INFO

Refer to System Resources: *For detailed information on operating, troubleshooting, and monitoring the EmpirBus Connect-50 system, including channel control, error codes, and module replacement procedures, please consult the official user manuals for the EmpirBus modules. For technical assistance or complex issues, always contact a qualified technician or authorized service center.*

POWER DISTRIBUTION PANEL

Located under the driver's side rear seat, the Power Distribution Panel acts as the central control center for the RV's electrical systems. This panel contains various circuit breakers, fuses, motorized switches, and fuse holders. It plays a vital role in distributing, regulating, and protecting the vehicle's electrical circuits.

Through an organized array of switches and protective components, the Power Distribution Panel allows for the streamlined activation or deactivation of circuits as needed.

Each switch controls specific systems, ensuring efficient operation and simplified troubleshooting. The integrated layout provides both access and visibility to the main power control mechanisms of the RV.

NOTICE

Breaker Panel Labels: *Check the panel decals on the Breaker Panels for more information on identifying the function of each breaker.*

NOTICE

What Is Overcurrent?: *An overcurrent is any current that exceeds a component's rated capacity. It may result from short circuits, overloads, arcs, or ground faults. Overcurrent can cause fires, insulation failure, or equipment damage. In the event of an overload, the circuit breaker cuts off the electricity in the affected circuit, preventing damage or fire.*

NOTICE

Short Circuits Explained: *A short circuit is a type of overcurrent that bypasses the normal path, taking a shortcut back to the power source. It is not an overload but still a serious hazard.*

NOTICE

Ampacity Defined: *Ampacity refers to the maximum current a conductor can carry continuously without exceeding its temperature rating.*

120V AC CIRCUIT BREAKERS

A Circuit Breaker is a safety device that includes electrical switches designed to interrupt current flow in the event of an overload, short circuit, or other fault conditions. This interruption helps prevent damage to electrical wiring, motors, and equipment, while reducing the risk of fire or injury.

Circuit breakers protect all 120V AC equipment and components in the RV. If a breaker trips, wait 30–90 seconds to allow it to cool, then reset it by switching it from "OFF" to "ON." Persistent tripping may indicate overloaded circuits or hidden electrical issues that require attention. Regular maintenance and inspection of these breakers is essential for safe and reliable vehicle operation.

NOTICE

Service Attention: *If this occurs, do not continue to reset. Contact service for repairs.*

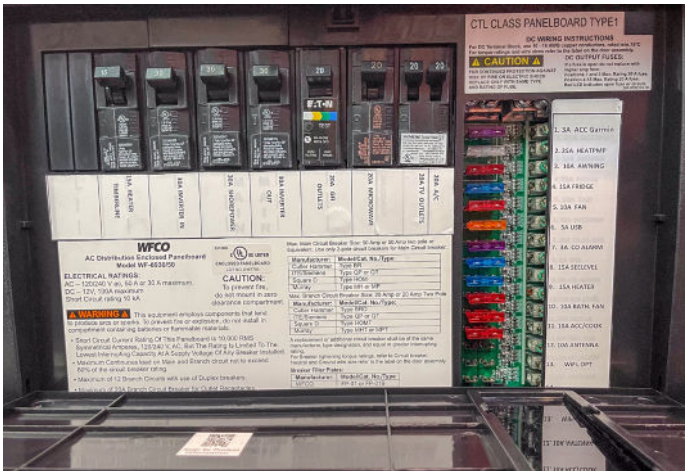

IMPORTANCE OF CIRCUIT BREAKERS

Circuit breakers are essential in any electrical system, especially in an RV where safety, space, and reliability are priorities. Key benefits include:

- **Safety:** Breakers protect against electrical fires by shutting off power when unsafe current levels are detected.
- **Equipment Protection:** Sudden surges or sustained overloads can damage appliances and wiring. Circuit breakers limit this damage by halting current flow.
- **Reliable Operation:** Ensures continuous, safe functionality of 120V equipment in the RV.
- **Troubleshooting Support:** A tripped breaker can signal potential faults like shorts or overloads, helping locate the problem quickly.

12V DC FUSES

Each 12V DC circuit in the RV is protected by a fuse, designed to break the circuit when current exceeds safe levels. Fuses help prevent electrical fires, damaged wires, and equipment failure.

Common causes of excessive current include:

- **Incorrect Wiring:** Mistakes in wiring can cause overcurrent.
- **Circuit Damage:** Loose or exposed wires may cause a short.
- **Circuit Overloading:** Attaching devices that draw more power than the circuit can handle.

When a fuse blows, immediately turn off all connected devices and replace it with a new fuse of the same amperage. Do not substitute with a higher-rated fuse, as this compromises protection.

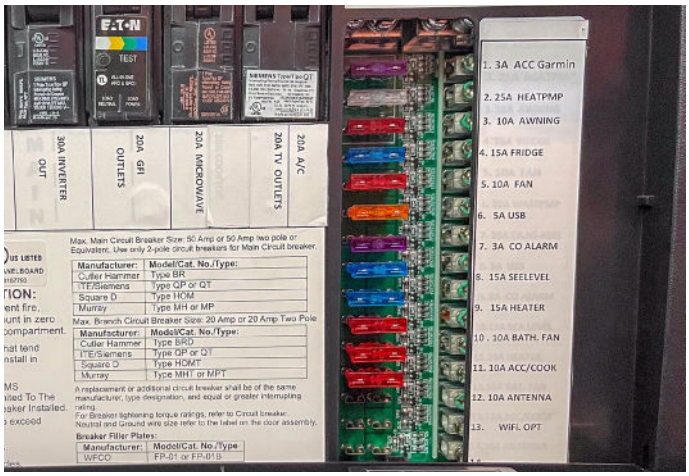

IMPORTANCE OF 12V DC FUSES

Having dedicated fuses for each 12V circuit is vital to the safe and functional operation of your RV:

- **Component Protection:** Fuses block harmful current levels from reaching electrical appliances and wiring.
- **Fire Prevention:** High current flow can overheat wires—fuses stop it before it becomes dangerous.
- **Fault Indication:** A blown fuse highlights wiring or load issues requiring attention.
- **Overall Safety:** By ensuring circuits are interrupted when problems arise, fuses support occupant safety and system reliability.

NOTICE

Fuse Repair Warning: *If you're not experienced with vehicle electrical systems, contact a qualified service professional or refer to the equipment manuals for guidance before attempting any fuse-related repairs.*

MAIN CAUSES OF ELECTRICAL CABLE FAILURE

Cable failure can pose serious risks including electrical faults and fire. Common causes of failure include:

- **Ageing:** Prolonged use, exposure to heat or stress, causes cracking or brittleness in insulation, increasing the risk of shorts, a likely cause of electrical fire.
- **Improper Application:** Using a cable not suited for the environment (e.g., too weak for mechanical stress or chemical exposure).
- **Mechanical Damage:** Bending, pinching, or crushing cables during installation or use weakens integrity.
- **Sheath Degradation:** Weather conditions, heat, cold, or chemicals can wear down the outer sheath, exposing internal conductors. These factores may cause electrical failure as the insulted cores are no longer protected by the sheating.
- **Moisture Intrusion:** Water inside the cable insulation leads to shorts and conductor corrosion.
- **Overheating:** Overloaded or under-rated cables generate internal heat, degrading insulation.
- **Electrical Overloading:** Plugging in too many high-draw devices can cause wiring to exceed its rated capacity, leading to overheating or failure.

Maintaining proper cable selection, installation practices, and regular inspection is critical for long-term reliability and safety of the RV's electrical system.

MOTORIZED BATTERY SWITCH AND MAIN FUSE

Your vehicle is equipped with a Motorized Battery Switch and a Main Fuse mounted close to the house batteries and the Power Distribution Panel. Together, these components provide primary control and protection for the 12V electrical system.

MOTORIZED BATTERY SWITCH (BEP 701-MD)

The installed switch is a BEP Marine High-Current Motorized Remote Battery Switch (Part No. 701-MD). This remotely operated switch isolates the house batteries from the electrical system, allowing safe operation, service, and storage.

- Provides remote control of battery isolation without direct access to the switch.
- Prevents battery drain during long-term storage.
- Allows quick emergency shutdown of the 12V house battery system.
- Ensures safer conditions when performing electrical maintenance.

NOTICE

Chassis Battery: *The chassis (starter) battery is not controlled by this switch.*

MAIN FUSE

Located directly above the Motorized Battery Switch, the Main Fuse is a high-capacity safety fuse. It protects the entire 12V electrical system from severe overloads or short circuits.

- Provides overcurrent protection for the entire house battery bank.
- Prevents overheating of main battery cables in case of a fault.
- Protects downstream electrical equipment from catastrophic failure.

NOTICE

Replacement: *Always replace the Main Fuse with the same type and amperage rating specified by the manufacturer.*

OPERATION OF THE MOTORIZED BATTERY SWITCH

The BEP 701-MD supports both automatic and manual operation modes. There is a LED located on the battery switch, indicating the Battery Switch status.

- **Automatic Mode (Auto ON / Auto OFF):** When the remotely mounted control switch is turned ON, the Motorized Battery Switch automatically moves from "Auto Off" to "Auto On." During Auto On, the LED indicator remains illuminated.
- **Manual Override Mode:** The automatic operation can be overridden by pressing the switch knob and turning it to "Man On" position or counterclockwise toward the "Man Off" position. During the time that the battery switch is in "Man on" mode, the "Man On" LED is illuminated.

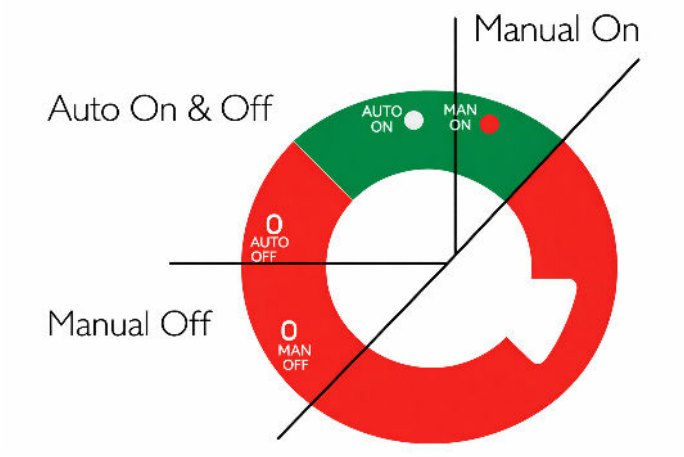

OPERATION INSTRUCTIONS

1. Ensure all high-power loads are turned off before operating the switch.

2. For automatic operation, set the remote control switch to ON. The motorized switch will engage and the LED will light.

3. For manual operation, press the knob on the switch and rotate it to "Man On" or "Man Off."

4. Avoid operating the switch while the system is under heavy load to prevent arcing or equipment damage.

NOTICE

Auto Operation: *Auto operation of the Battery Switch is not possible whilst in manual mode. If the auto operation is attempted, the LED will flash for 3 seconds and then stop. The knob must be returned to "Auto Off" before normal auto operation can continue.*

NOTICE

Auto Mode LED Indications:
- **LED OFF:** *The battery switch is off*
- **LED ON:** *The battery switch is on*
- **LED FLASHING:** *LED flashes whilst moving between auto-on and auto-off.*
- **LED Rapid Flash:** *On 0.1 sec & Off 0.1 Sec: Voltage is outside specification i.e. Less than 8 Volts or greater than 30 Volts*

NOTICE

Manual Mode LED Indications:
- **LED OFF:** *The battery switch is off*
- **LED ON:** *The battery switch is on*

CAUTION

Switching Under Load: *Avoid turning the Battery Disconnect Switch while high-power equipment such as the inverter or air conditioner is running. This may cause arcing or damage to components.*

CAUTION

Fuse Bypass: *Never bypass the Main Fuse with wire or metal objects. This removes essential protection from the electrical system.*

WARNING

Electrical Service: *Disconnect the house batteries before working on any part of the 12V electrical system. Failure to do so can result in shock, burns, or damage to electronics.*

WARNING

Live Terminals: *Do not attempt to service or replace the Main Fuse without fully disconnecting the battery bank.*

DANGER

Tampering or Incorrect Rating: *Bypassing the Battery Disconnect Switch or installing the wrong fuse type or rating can cause fire, equipment failure, serious injury, or death.*

HEATING SYSTEM

The Timberline Heating and Hot Water System in your RV is designed for efficiency, comfort, and reliability. It uses the Autoterm Binar Compact heater, operating on diesel or gasoline and includes an integrated 110V electric heating element. Heated glycol circulates through quiet air handlers and a water heat exchanger to provide warm air and instant hot water.

All heating and hot water functions are controlled from the Garmin Control System touchscreen, which consolidates all operations into a single, easy-to-use interface. While a secondary Timberline touchscreen exists, Garmin is recommended for daily use due to faster, more intuitive control.

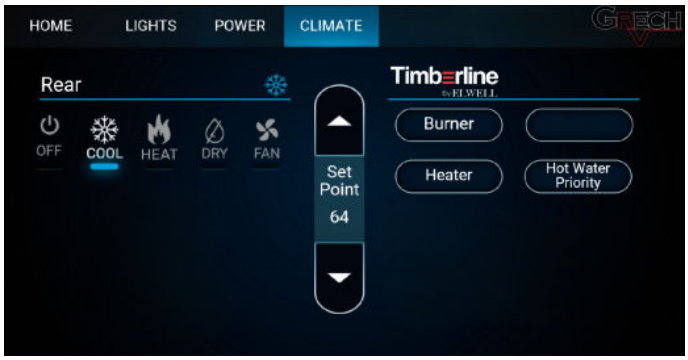

CAUTION

Airflow: *Do not block or cover air handlers or heating outlets. Restricted airflow can cause overheating and reduce efficiency.*

WARNING

Ventilation: *Ensure proper ventilation during operation. Monitor for any exhaust odors and keep the vehicle interior adequately ventilated to prevent gas buildup.*

OPERATION: GARMIN CONTROL SYSTEM

From the Garmin touchscreen, users can access all Timberline heating and hot water controls within the Climate section of the system interface.

To operate the system:

1. Power on the Climate screen on the Garmin Control display.

2. Adjust the Set Point Temperature:

- On the Garmin Climate screen, set the desired cabin temperature using the up or down arrows.

3. Select one or more desired heating options from the available icons:

- **Burner:** Enables the fuel-fired heater (diesel/gasoline).
- **Electric:** Enables the 110V electric heating element.
- **Heater:** Activates general cabin heating.
- **Hot Water Priority:** Prioritizes water heating over cabin heating.

4. Automatic Management

Once the desired modes are selected, the Timberline system automatically determines which heat source(s) to operate based on temperature, available power, and heating demand. The user only needs to set the temperature and select heating preferences; the system manages Burner, Electric, or both simultaneously to maintain optimal comfort.

5. Fan Operation

- Fans automatically adjust speed to maintain steady airflow and consistent cabin warmth.
- Once the desired temperature is reached, fans slow down to low airflow to sustain comfort.

WINTER AND SUMMER HEATING LOOPS

The Timberline Hydronic System operates using two main circulation loops:

WINTER LOOP

The Winter Loop describes how the Timberline system distributes heat during cold weather, providing both cabin warmth and hot water.

1. Glycol begins in the expansion tank, which contains the electric heating element.

2. Glycol moves to the circulation pump and is then pumped into the diesel heater, the primary heat source (17,000 BTU).

3. Glycol passes through the heat exchanger, where domestic cold water is heated for showers, sinks, and other uses.

4. Hot glycol reaches the solenoid, which functions as a controlled gate directing heat to the cabin fans to maintain the set temperature.

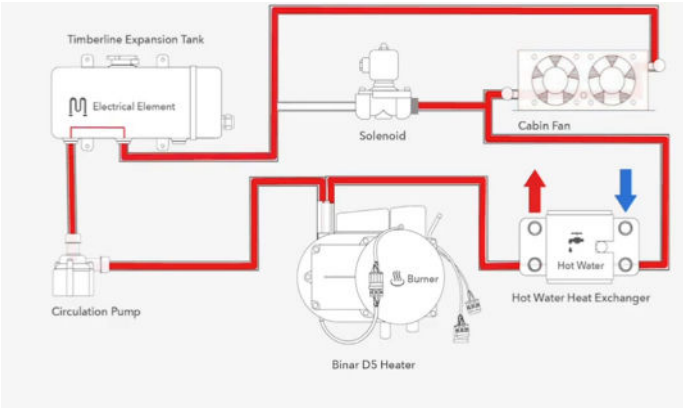

NOTICE

Maintenance: *Regularly inspect fluid levels, air handlers, and electrical connections to maintain optimal performance. Schedule routine service to ensure reliability and extend system life.*

DANGER

Hazardous Fumes: *If you detect any unusual smells such as exhaust or fuel vapors, shut the system down immediately. Continued operation under these conditions may lead to fire, carbon monoxide poisoning, or other serious hazards.*

SUMMER LOOP

In the Summer Loop, the system allows the glycol to bypass the cabin fans for cooling purposes:

- When glycol reaches the solenoid, the gate opens, preventing airflow through the cabin fans and allowing the RV to remain at a cooler temperature.
- Hot water production remains available via the heat exchanger.

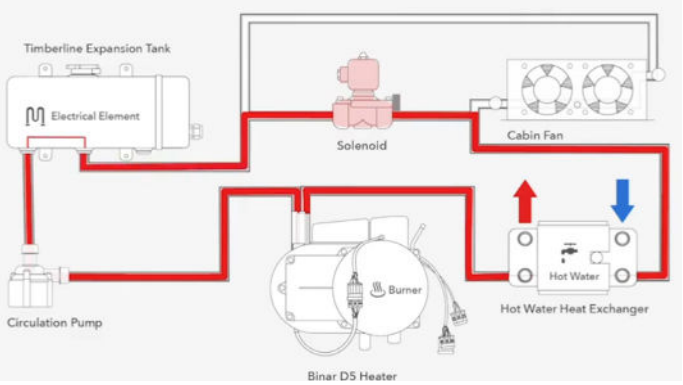

CREATING CONTINUOUS HOT WATER

- To produce continuous hot water, select Burner, Electric, and/or Hot Water Priority as desired.
- The system prioritizes electric heat first to minimize fuel consumption.
- If demand exceeds electric capacity, the diesel Burner automatically engages to maintain hot water availability.
- The Timberline system provides limited hot water production, rated at approximately 1 gallon per minute under normal operating conditions.

NOTICE

Hot Water Only Operation: *If you want to heat water without warming the cabin, ensure that only the Water Heater Priority and Burner/Electric icons are selected.*

SYSTEM OPERATION

Once the cabin nears the desired temperature, the fans automatically slow down and maintain low airflow to preserve comfort levels inside the RV.

The Timberline Heating System powers both the water heater and the furnace. To begin operation, select your preferred heat source.

There are two available heating sources within the Timberline system:

- The Electric Element, which operates using 110V shore power.
- The Fuel-Fired Burner, which runs on diesel or gasoline, depending on your chassis configuration.

NOTICE

Fuel Level: *When using the diesel heating system, make sure the vehicle has at least 3/8 of a tank of fuel. Operating below this level may trigger error code 29 on the Elwell/Timberline panel.*

NOTICE
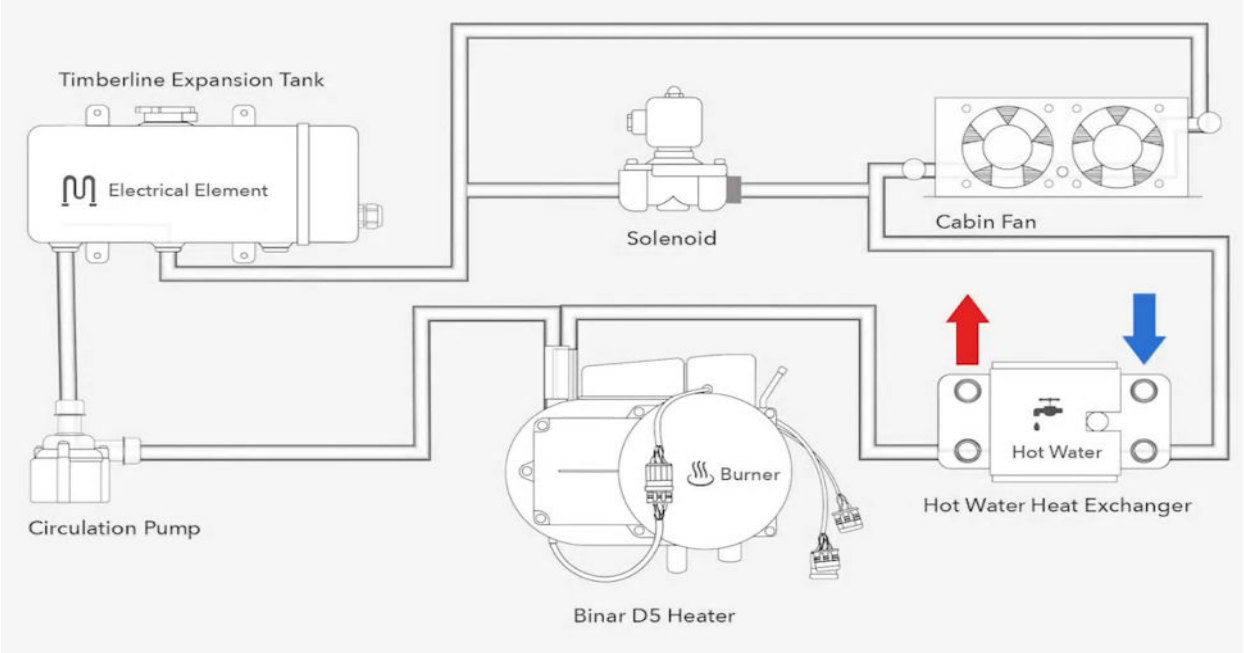
Electric Heat Limitations: *If you wish to heat the cabin using only the electric portion of the system, the RV must be connected to shore power. However, electric-only heating is intended for mild or moderate weather; in colder outdoor conditions, it may not provide sufficient cabin warmth without assistance from the fuel burner.*